COMPRESSORS EUROPE

TAILORED EFFICIENCY

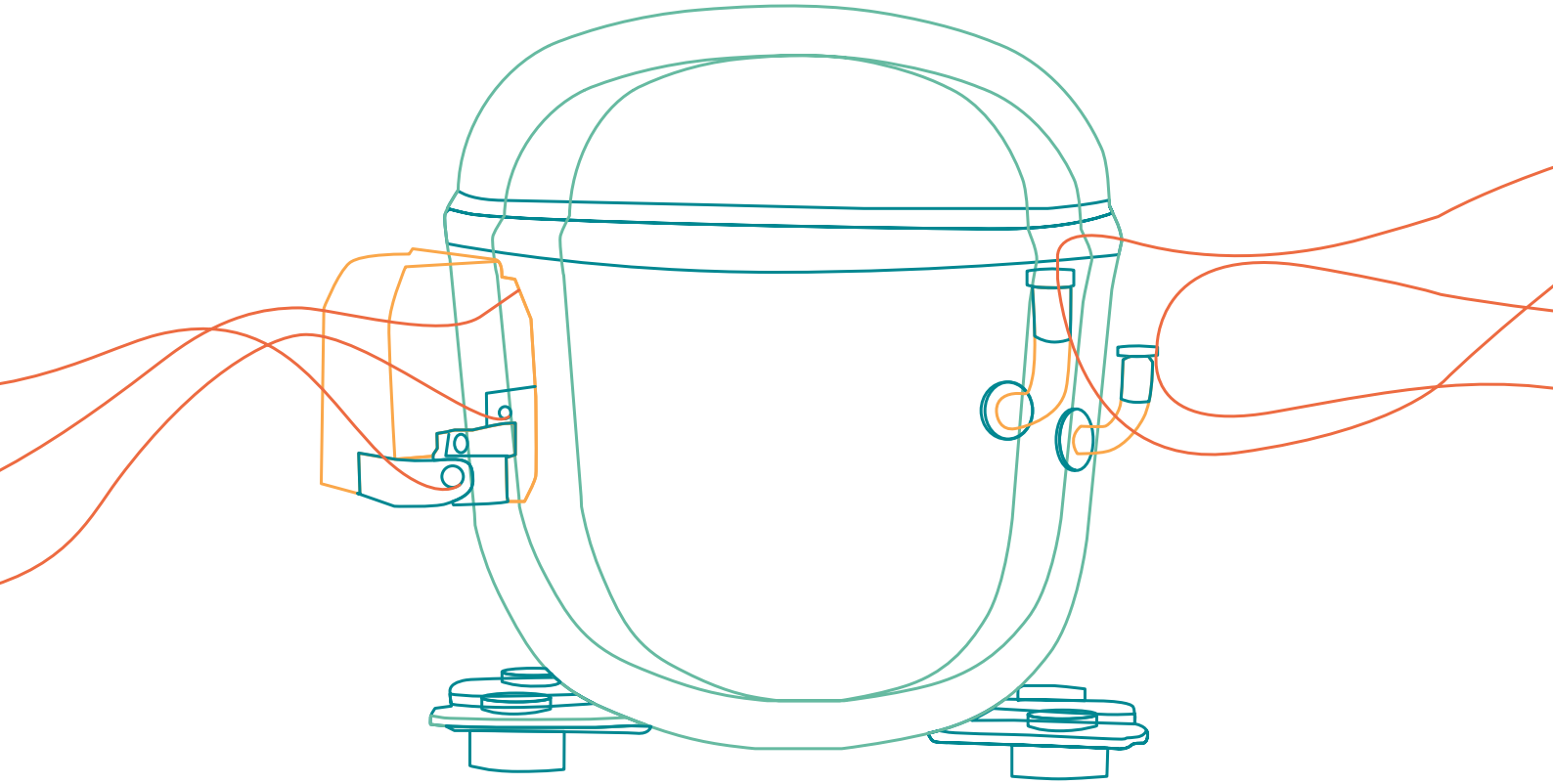

Maximum energy optimization
from production to product.

- R134a
- R290
- R404A/R507
- R600a

embraco

POWER IN.
CHANGE ON.

EVERYTHING BECOMES A COOLER

embraco POWER IN. CHANGE ON.

EMBRACO IN PILLS

HIGH EFFICIENCY & GREEN SOLUTIONS
EMBRACO COMMERCIAL PRODUCT OVERVIEW

EUROPE RANGE COMMERCIAL COMPRESSORS

COMPRESSOR SELECTION

GENERAL DATA AND PERFORMANCE

EXTERNAL VIEWS & WIRING DIAGRAMS

EMBRACO IN PILLS

- MORE THAN 11.500 EMPLOYEES
- MORE THAN 400 PROFESSIONALS IN R&D
- PRODUCTION CAPACITY OF OVER 38 MILLION COMPRESSORS PER YEAR
- MORE THAN 400 MILLION PRODUCTS PRODUCED TO DATE
- MORE THAN 1.000 PATENTS WORLDWIDE
- BUSINESS CONDUCTED IN MORE THAN 80 COUNTRIES
- R&D LABORATORIES IN 4 CONTINENTS

EMBRACO is a company specialized in cooling solutions and world leader in the hermetic compressor market. **Our mission:** provide innovative solutions for a better quality of life, always attentive to technological excellence and sustainability.

Technological leadership, operational excellence and sustainability are some of the pillars which ensure the EMBRACO differential over other companies in the world market. Its products are now considered the favorite leading home appliance manufacturers by major automakers and are spotlighted by manufacturers of commercial refrigeration equipment.

With global operations and production capacity exceeding 38 million units a year, the company offers solutions that are differentiated for their innovation and low energy consumption. Its 11.500 employees work in factories and offices located in Brazil (headquarters), China, Italy, Slovakia, Mexico, the United States and Russia.

Energy efficiency is constantly sought in the processes, products and relationships with the communities where it operates. Our company is the absolute leader in this segment, being able to offer products that meet the most restrictive international standards regarding energy consumption.

As a worldwide leader, **EMBRACO** tries to anticipate market changes, and in doing so, our company is in a state of permanent transformation. We continuously assess our processes in order to maintain our leadership within the industry and promote growth, without forgetting the pillars of our organization.

HIGH EFFICIENCY

Energy efficiency is the base for all our product development. This means producing compressors that consume each time less energy and less raw material in manufacturing, at the same time maintaining **Embraco** brand quality. Thus, we continuously invest in research and development to create products that are more efficient and silent and do not harm the environment.

As a result of efforts to increase energy efficiency in our products, and to surpass our customers' highest expectations, we have developed **Embraco Fullmotion** – a compressor that varies the cooling capacity according to the need, providing a reduction in energy consumption up to 40%.

We have a full product portfolio that offers compressors of a wide ranges of efficiency. We are a global benchmark in developing solutions that meet the strictest international standards regarding energy consumption. With a commitment to seek continuous product and process improvement, each new generation of **Embraco** compressors is more efficient than the previous one.

GREEN SOLUTIONS

Embraco has always been committed to offer solutions to the market that go beyond the traditional ones. We have been at the forefront, for example, in launching products compatible with the most environmentally advanced refrigerant gases. We were the first organization to produce compressors that use alternative fluid refrigerants, such as propane (R290), to replace HFCs.

This natural refrigerant has important ecological advantages, since it does not contribute to ozone layer deterioration and has limited greenhouse effect. Furthermore, its noise levels are low, while its efficiency rate gain and cooling capacity is quite high. To know our product portfolio in R290 contact our sales team.

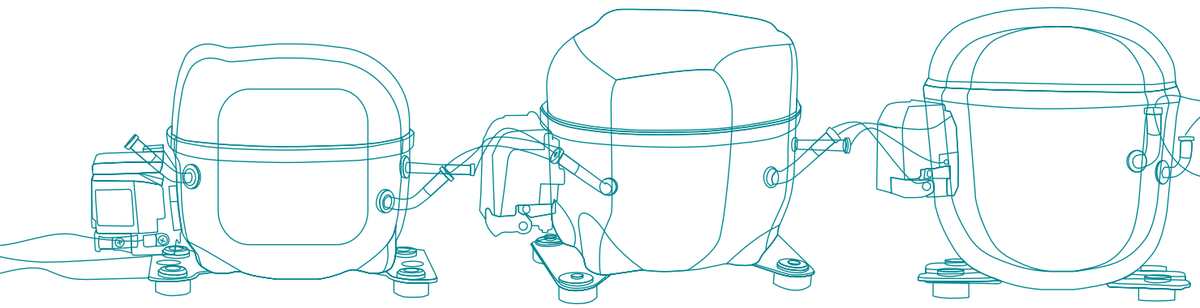

Embraco Commercial Product Overview

EUROPE RANGE

EM

NE

NT

NJ

BRAZIL RANGE

EM

F

EG

CONDENSING UNIT

UEM

UNE

UNT

UNJ

SLIDING UNITS

FULLMOTION

VEM

VEG

VNE

EUROPE RANGE

COMMERCIAL COMPRESSORS

EMT

Small Size

High Efficiency
Up to 1,36 w/w - LBP
Up to 2,82 w/w - M/HBP
50 Hz @rated point EN 12900

Global Platform

Low Noise ~2 dB(A) less
(If compared to the average noise of other models of the same range.)

Developed for: Refrigerators, Freezers and Bottle coolers.

Applications: **LBP, M/HBP**

Refrigerants: **R134a; R404A/R507; R600a; R290**

FAMILY	REFRIGERANT	COOLING CAPACITY RANGE* W				EFFICIENCY RANGE* W/W				DISPLACEMENT cc		HP		WEIGHT	HEIGHT
		LBP		M/HBP		LBP		M/HBP							
		MIN	MAX	MIN	MAX	MIN	MAX	MIN	MAX	MIN	MAX	MIN	MAX	MIN/MAX Kg	MIN/MAX mm
EMT/ EMY	R134a	37	88	321	975	0,83	1,16	2,18	2,87	3,01	6,76	1/10	1/3+	7,1 - 7,8	158 - 166
	R404A	141	222	378	484	1,08	1,15	1,76	1,90	3,97	6,76				
	R290	123	266	343	632	1,12	1,28	1,96	2,2	3,97	9,50				
	R600a	45	162	244	805	1,1	1,36	2,2	2,82	3,97	12,21				

(*) data @50 Hz EN12900 conditions

NEK/NEU

High Cooling Capacity at Low Evaporating Temperatures
NEW VALVE SYSTEM
to improve cooling capacity and efficiency
NEU from 5% to 15% higher than NEK

High Efficiency Level
NEK Up to Up to 1,21 w/w - LBP
Up to 2,43 w/w - M/HBP
50 Hz @rated point EN 12900
NEW HEAD designed to decrese heat loss, low super heat mechanical losses, resulting in greater energy efficiency.
NEU from 5% to 15% higher than NEK, depending on the refrigerant type

Better Performances
NEW PLASTIC SUCTION MUFFLER
To optimize acoustic and fluidynamic

Very Low Sound Level
NEW SHELL DESIGN
To improve high frequency noise

NEK

Developed for: Freezers, Merchandisers, Ice Makers

Applications: **LBP, M/HBP**

Refrigerants: **R134a; R404A/R507; R600a; R290**

FAMILY	REFRIGERANT	COOLING CAPACITY RANGE* W				EFFICIENCY RANGE* W/W				DISPLACEMENT cc		HP		WEIGHT	HEIGHT
		LBP		M/HBP		LBP		M/HBP							
		min	MAX	min	MAX	min	MAX	min	MAX	min	MAX	min	MAX	MIN/MAX Kg	MIN/MAX mm
NEK	R134a	93	217	663	1315	0,85	1,16	1,90	2,46	7,40	16,80	1/5	3/4	10,4 - 11,6	187 - 206
	R404A	178	380	542	1166	0,80	1,00	1,46	1,69	6,20	16,80				
	R290	199	427	402	1051	0,99	1,21	1,73	1,94	6,20	16,80				
	R600a			606	805			2,29	2,43	12,12	16,80				

(*) data @50 Hz EN12900 conditions

NEU

Developed for: Freezers, Merchandisers, Ice Makers

Applications: **LBP, M/HBP**

Refrigerants: **R134a; R404A; R290; R600a****

FAMILY	REFRIGERANT	COOLING CAPACITY RANGE* W				EFFICIENCY RANGE* W/W				DISPLACEMENT cc		HP		WEIGHT	HEIGHT
		LBP		M/HBP		LBP		M/HBP							
		min	MAX	min	MAX	min	MAX	min	MAX	min	MAX	min	MAX	MIN/MAX Kg	MIN/MAX mm
NEU	R134a	/	/	1102	1492	/	/	2,12	2,48	12,12	16,80	1/3	1	10,6-12	200-206
	R290	364	457	676	1109	1,21	1,35	1,95	2,17	13,54	16,80				
	R404A	275	501	792	1089	1,08	1,14	1,71	1,89	8,78	16,80				

(*) data @50 Hz EN12900 conditions
(**) UD

NT/NTU

New Design
NEW INTERNAL DESIGN
New Vertical Tubes Configuration
New Universal base plate

High Efficiency
Up to 1,23 w/w - LBP
Up to 2,11 w/w - M/HBP
50 Hz @rated point EN 12900

Better Performances

Low Sound and Vibration Level
NEW SUSPENSION SYSTEM
To improve high frequency noise.

Developed for: Reach in coolers, Merchandisers, Ice Makers, Beers Coolers.

Applications: **LBP, M/HBP**

Refrigerants: **R134a; R404A/R507; R290.**

FAMILY	REFRIGERANT	COOLING CAPACITY RANGE* W				EFFICIENCY RANGE* W/W				DISPLACEMENT cc		HP		WEIGHT	HEIGHT
		LBP		M/HBP		LBP		M/HBP							
		min	MAX	min	MAX	min	MAX	min	MAX	min	MAX	min	MAX	MIN/MAX Kg	MIN/MAX mm
NT	R134a			1405	2582			2,13	2,94	17,4	27,8	1/2	1 1/2	15,7 - 18,3	207 - 250
	R404A	341	719	891	2426	0,89	1,07	1,5	2,02	12,5	27,8				
	R290	400	689	952	1937	1,09	1,23	1,74	2,11	14,5	27,8				

(*) data @50 Hz EN12900 conditions

NJ

Frame Breaker
Up to 33,4 cm³

High reliability and proved performances

Easy installation
Rotolock valve version

Low Sound and Vibration Level

Developed for: Walk-in Coolers, Merchandisers, Milk Coolers, Refrigerated Islands, GDMs.

Applications: **LBP, M/HBP**

Refrigerants: **R134a; R404A/R507**

FAMILY	REFRIGERANT	COOLING CAPACITY RANGE* W				EFFICIENCY RANGE* W/W				DISPLACEMENT cc		HP		WEIGHT	HEIGHT
		LBP		M/HBP		LBP		M/HBP							
		MIN	MAX	MIN	MAX	MIN	MAX	MIN	MAX	MIN	MAX	MIN	MAX	MIN/MAX Kg	MIN/MAX mm
NJ	R134a	/	/	2021	2740	/	/	2,16	2,40	26,1	34,4	3/4	1 1/2	19,6 - 21,7	253 - 277
	R404A	585	809	1648	2506	0,85	1,06	1,59	1,9	21,7	34,4				

(*) data @50 Hz EN12900 conditions

Applications & Test conditions

LBP
(Low Back Pressure)
Low evaporating temperatures (lower than -20 °C)
Applications:
refrigerators, frozen food cabinets, frozen food display cases, display windows, etc.

MBP
(Medium Back Pressure)
Medium evaporating temperatures (higher than -20 °C);
Applications:
fresh food cabinets, drink coolers, ice makers etc.

M/HBP
(Medium / High Back Pressure)
Evaporating temperatures between -20°C and +10°C;
Applications: coolers, merchandisers, etc

HBP
(High Back Pressure)
High evaporating temperatures (higher than -15 °C)
Applications: fresh food cabinets, ice makers, dehumidifiers. dryers,etc.

TEST CONDITIONS (RATING POINT)	APPLICATION	EVAPORATING TEMPERATURE C°	CONDENSING TEMPERATURE C°	GAS RETURN TEMPERATURE C°	SUBCOOLING	COMPRESSOR AMBIENT TEMPERATURE C°
EN 12900	LBP	-35°	40°	20° (*)	NO SUBCOOLING	32°
	MBP	-10°	45°	20° (*)		
	HBP	+5°	50°	20° (*)		
ARI 540	LBP	-23,3°	48,9°	4,4°	NO SUBCOOLING	35°
	MBP	-6,7°	48,9°	4,4°		
	HBP	+7,2°	54,4°	18,3°	8,3 K	
ASHRAE SUBCOOLED	LBP	-23,3°	54,4°	32,2°	22,2 K	32,2°
	MBP and HBP	7,2°	54,4°	35°	8,3 K	35°
CECOMAF	LBP	-25	55°	32°	NO SUBCOOLING	32°

(*) For EMT and NE models return gas temperature is 32°C

CONVERSION UNIT	
1 watt	3,41 Btu/h
1 watt	0,86 kcal/h
1 kcal/h	3,97 Btu/h

Operating Envelope

1- REFRIGERANT R134a - R600a APPLICATION LBP

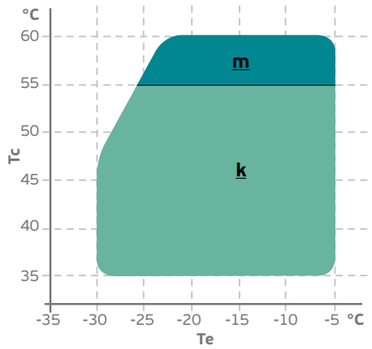

2- REFRIGERANT R404A - R507 - R290 APPLICATION LBP

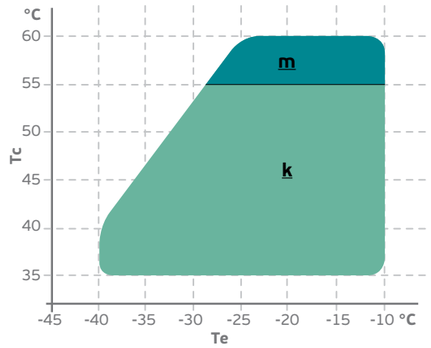

3- REFRIGERANT R404A - R507 - R290 APPLICATION MBP

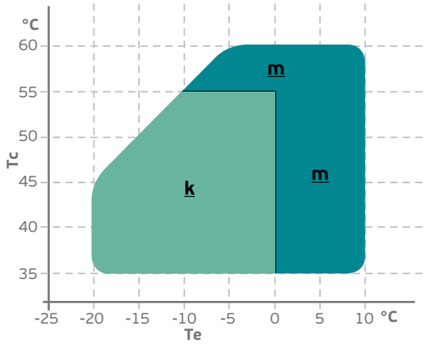

4- REFRIGERANT R134a - R600a APPLICATION HBP

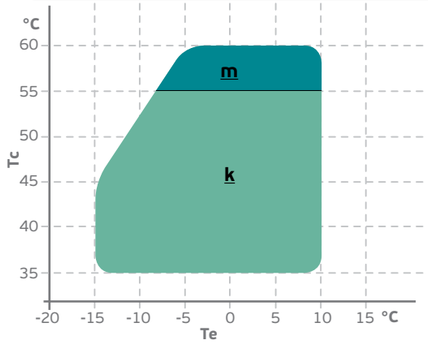

Tc - Condensing Temperature | **k** - Ambient 32ºC and return gas 20ºC
Te - Evaporating Temperature | **m** - Ambient 32ºC and return gas 20ºC (for transitory period)

PLEASE NOTE: the use of the compressor outside the intended working range cannot make use of the warranty.

Product Maps 50Hz
COMPRESSOR PRODUCT MAP 50 Hz/DUAL FREQUENCY/3Ø

	R-134a								R-404A / R-507								R-290								R-600a							
	LBP	VOLT. FREQ.	COOL. CAP. [W]	DISPL. [cc]	HBP	VOLT. FREQ.	COOL. CAP. [W]	DISPL. [cc]	LBP	VOLT. FREQ.	COOL. CAP. [W]	DISPL. [cc]	MBP	VOLT. FREQ.	COOL. CAP. [W]	DISPL. [cc]	LBP	VOLT. FREQ.	COOL. CAP. [W]	DISPL. [cc]	MBP	VOLT. FREQ.	COOL. CAP. [W]	DISPL. [cc]	LBP	VOLT. FREQ.	COOL. CAP. [W]*	DISPL. [cc]	HBP	VOLT. FREQ.	COOL. CAP. [W]	DISPL. [CC]
EM	EMT22HLP	A	37	3,01	EMT37HDP	A / B	321	3,40	EMT2117GK	A	141	4,50	EMT6144GK	A	378	3,97	EMT1117U	A	123	4,50	EMT6144U	A	343	4,50	EMY20CLC	A	45	3,97	EMT30CDP	A	246	4,50
	EMT36HLP	A	54	3,97	EMT45HDR	A	379	3,97	EMT2121GK	A	174	5,20	EMT6152GK	A	424	4,50	EMT2117U	A	123	4,50	EMT6152U	A	418	5,20	EMX20CLC	A	45	3,97	EMU5125Y	A	244	4,50
	EMT43HLP	A	66	4,85	EMT50HDP	A / B	423	4,50	EMT2125GK	A	204	5,96	EMT6165GK	A	484	5,20	EMT1121U	A	159	5,57	EMT6165U	A	485	5,96	EMY26CLC	A	61	5,20	EMT45CDP	A	360	6,78
	EMT49HLP	A	78	5,57	EMT6144Z	A	519	5,20	EMT2130GK	A	222	6,76					EMT2121U	A	159	5,57	EMTE6181U	A	632	7,55	EMY32CLC	A	72	5,96	EMU5132Y	A (RSIR)	358	6,79
	EMT60HLP	A	88	6,76	EMT6160Z	A	648	6,76									EMT1125U	A	177	5,96					EMX32CLC	A	72	5,96	EMU5132Y	A (RSCR)	363	6,79
					EMT6170Z	A	725	7,69									EMT2125U	A	177	5,96					EMY40CLC	A	90	7,24	EMT6144Y	A	486	9,05
					EMTE6187Z	A	975	9,50									EMT1130U	A	198	6,76					EMY46CLC	A	101	7,96	EMT6160Y	A	588	11,15
																	EMT2130U	A	196	6,76					EMX46CLC	A	101	7,96				
																	EMTE2134U	A	265	9,50					EMY55CLP	A	114	9,05				
																									EMX55CLC	A	115	9,05				
																									EMY66CLP	A	134	10,62				
																									EMX70CLC	A	143	11,14				
																									EMX80CLT	A	162	12,21				
NE NEK	NEK1116Z	A	93	7,40	NEK6160Z	A	663	7,28	NEK2125GK	A	178	6,20	NEK6165GK	A	542	6,20	NEK2125U	A	199	7,28	NEK6152U	A	402	5,45					NEK6160Y	A	606	12,12
	NEK2116Z	A	93	7,40	NEK6160Z	B	663	7,28	NEK2130GK	A	210	7,40	NEK6181GK	A	599	7,28	NEK2134U	A	271	10,00	NEK6165U	A	464	6,20					NEK6170Y	A	720	14,30
	NEK1118Z	A	111	8,40	NEK6170Z	A	775	8,40	NEK2134GK	A	253	8,78	NEK6210GK	A	724	8,78	NEK1150U	A	333	13,54	NEK6181U	A	523	7,28					NBY5170Y	A	UD	14,30
	NE1121Z	A / K	125	9,27	NEK6170Z	B	775	8,40	NEK2150GK	A	346	12,12	NEK6213GK	A	972	12,12	NEK2150U	A	334	13,54	NEK6210U	A	640	8,78					NEK6187Y	A	805	16,80
	NE2121Z	A / K	125	9,27	NEK6187Z	A	894	10,00	NEK2168GK	A (CSIR)	360	14,30	NEK6217GK	A	1166	14,30	NEK2160U	A	427	16,80	NEK6214U	A (CSIR)	880	12,12								
	NE1130Z	A / K	161	12,12	NEK6187Z	A	896	10,00	NEK2168GK	A (CSR)	380	14,30									NEK6214U	A (CSR)	893	12,12								
	NE2130Z	K	156	12,12	NEK6210Z	A	1024	12,12													NEK6217U	A (CSIR)	1018	14,30								
	NE2130Z	A	171	12,12	NEK6210Z	A	1046	12,12													NEK6217U	A (CSR)	1051	14,30								
	NE2134Z	A	179	14,30	NEK6212Z	A	1206	14,30																								
	NEK2140Z	A	217	16,80	NEK6212Z	A	1217	14,30																								
					NEK6214Z	A	1315	16,80																								
NEU					NEU6210Z	A (CSIR)	1102	12,12	NEU2140GK	A (CSIR)	275	8,78	NEU6212GK	A (CSIR)	792	8,78	NEU2155U	A (CSIR)	364	13,54	NEU6210U	A (CSIR)	676	8,78								
					NEU6210Z	A (CSR)	1109	12,12	NEU2155GK	A (CSIR)	368	12,12	NEU6215GK	A (CSIR)	1065	12,12	NEU2155U	A (CSR)	384	13,54	NEU6212U	A (CSIR)	793	10,00								
					NEU6212Z	A(CSIR)	1271	14,30	NEU2168GK	A (CSIR)	416	14,30	NEU6215GK	A (CSR)	1089	12,12	NEU2168U	A (CSR)	457	16,80	NEU6212U	A (CSR)	800	10,00								
					NEU6212Z	A (CSR)	1288	14,30	NEU2168GJ	A (CSR)	437	14,30									NEU6214U	A (CSIR)	936	12,12								
					NEU6214Z	A (CSIR)	1459	16,80	NEU2178GK	A (CSR)	501	16,80									NEU6214U	A (CSR)	944	12,12								
					NEU6214Z	A (CSR)	1492	16,80													NEU6217U	A (CSIR)	1086	14,30								
																					NEU6217U	A (CSR)	1109	14,30								
																					NEU6220U	A	UD	16,80								
NT					NT6215Z	N	1405	17,4	NT2168GS	R	341	14,5	NT6217GK	N (CSIR)	960	12,6	NT2160U	A (CSIR)	400	17,4	NT6217U	A (CSIR)	952	14,5								
					NT6215Z	C	1435	17,4	NT2168GK	N	354	14,5	NT6217GK	N (CSR)	891	12,6	NT2160U	A (CSR)	407	17,4	NT6220U	A (CSIR)	1193	17,4								
					NT6217Z	A (CSIR)	1655	20,4	NT2178GK	A (CSIR)	416	17,4	NT6220GK	N (CSIR)	1080	14,5	NT2170U	A (CSIR)	478	20,4	NT6220U	A (CSR)	1167	17,4								
					NT6217Z	A (CSR)	1695	20,4	NT2178GK	A (CSR)	420	17,4	NT6220GK	N (CSR)	1096	14,5	NT2170U	A (CSR)	480	20,4	NT6222U	A (CSIR)	1372	20,4								
					NT6217Z	N (CSIR)	1619	20,4	NT2180GK	A (CSIR)	490	20,4	NT6222GK	A (CSIR)	1287	17,4	NT2180U	A (CSIR)	550	22,4	NT6222U	A (CSR)	1412	20,4								
					NT6217Z	N (CSR)	1680	20,4	NT2180GK	A (CSR)	530	20,4	NT6222GK	A (CSR)	1332	17,4	NT2180U	A (CSR)	563	22,4	NT6224U	A	1558	22,4								
					NT6220Z	N (CSIR)	1744	22,4	NT2192GS	R	549	22,4	NT6222GK	N (CSIR)	1322	17,4	NT2210U	A (CSR)	689	27,8	NT6230U	A	1937	27,8								
					NT6220Z	N (CSR)	1752	22,4	NT2192GK	A (CSIR)	551	22,4	NT6222GK	N (CSR)	1307	17,4																
									NT2192GK	A (CSR)	568	22,4	NT6224GK	A	1573	20,4																
									NT2210GK	A (CSR)	685	26,2	NT6226GK	A (CSIR)	1717	22,4																
									NT2212GS	R	690	27,8	NT6226GK	A (CSR)	1752	22,4																
									NT2212GK	A (CSIR)	719	27,8																				
NTU					NTU6222ZV	A	2117	23,8					NTU6232GKV	A	1757	20,4																
					NTU6224ZV	A	2582	27,8					NTU6234GKV	A	2091	23,7																
													NTU6238GKV	A	2288	26,2																
													NTU6240GKV	A	2426	27,8																
NJ					NJ6220Z	A	2021	26,1	NJ2192GK/J	A	585	26,1	NJ9226GK	V	1648	21,7																
					NJ6220ZX	M	2240	26,1	NJ2192GS	M	591	26,1	NJ9226GS	M	1667	21,7																
					NJ6226Z	A	2610	34,4	NJ2212GS	M	775	34,4	NJ9232GK	A	1911	26,1																
					NJ6226ZX	M	2740	34,4	NJ2212GK/J	A	809	34,4	NJ9232GS	M	1972	26,1																
													NJ9238GK	V	2424	32,7																
													NJ9238GS	M	2506	32,7																

Cool. Cap. EN12900 / Rated Point

Volt./Freq.
A 220-240V/50Hz 1 ~ B 200-230V/50Hz - 208-230V/60Hz 1 ~ C 220V/50Hz 1 ~ K 200-220V/50Hz 1 ~
M 380-420V/50Hz 3 ~ N 200-240V/50Hz (230V/60Hz) 1 ~ R 200V 50/60 Hz 3ph ~ V 230V/50Hz 1 ~

Product Maps 60Hz
COMPRESSOR PRODUCT MAP 60Hz

60Hz	R-134a								R-404A / R-507								R-290							
	LBP	VOLT. FREQ.	COOL. CAP. [W]	DISPL. [cc]	HBP	VOLT. FREQ.	COOL. CAP. [W]	DISPL. [cc]	LBP	VOLT. FREQ.	COOL. CAP. [W]	DISPL. [cc]	MBP	VOLT. FREQ.	COOL. CAP. [W]	DISPL. [cc]	LBP	VOLT. FREQ.	COOL. CAP. [W]	DISPL. [cc]	MBP	VOLT. FREQ.	COOL. CAP. [W]	DISPL. [cc]
EM					EMT37HDP	B	378	3,40																
					EMT50HDP	B	506	4,50																
NE NEK	NEK2116Z	G	171	7,40	NEK6132Z	G	473	4,52	NEK2117GK	G	211	4,52	NEK6144GK	G	400	4,52	NEK2134U	G	415	10,00	NEK6152U	G	449	5,45
	NE2121Z	G	204	9,27	NEK6144Z	G	584	5,45	NEK2121GK	G	261	5,45	NEK6144GK	D	592	4,52	NEK2150U	G (CSIR)	550	13,54	NEK6165U	G	505	6,20
	NE2130Z	G	269	12,11	NEK6160Z	G / B	758	7,28	NEK2125GK	G	314	6,20	NEK6152GK	G	481	5,45	NEK2150U	G (CSR)	554	13,54	NEK6210U	G	717	8,77
	NE2134Z	D	300	14,30	NEK6170Z	G	878	8,40	NEK2134GK	D	400	8,78	NEK6165GK	G	850	6,20					NEK6213U	G	998	12,11
	NE2134Z	G	312	14,30	NEK6170Z	B	881	8,40	NEK2134GK	G	420	8,78	NEK6181GK	G (CSIR)	922	7,30								
	NEK2140Z	G	390	16,80	NEK6187Z	B	1000	10,00	NEK2150GK	D	509	12,12	NEK6181GK	G (CSR)	977	7,30								
					NEK6187Z	G	1007	10,00	NEK2150GK	G (CSIR)	527	12,12	NEK6181GK	D	954	7,30								
					NEK6210Z	B	1138	12,12	NEK2150GK	G (CSR)	536	12,12	NEK6210GK	G (CSIR)	1160	8,78								
					NEK6210Z	G	1190	12,12	NEK2168GK	G	577	14,30	NEK6210GK	G (CSR)	1192	8,78								
					NEK6212Z	G (CSIR)	1361	14,30	NEK2168GK	D	584	14,30	NEK6210GK	D	1139	8,78								
					NEK6212Z	G (CSR)	1407	14,30					NEK6213GK	G (CSIR)	1444	12,12								
					NEK6212Z	B	1323	14,30					NEK6213GK	G (CSR)	1528	12,12								
					NEK6214Z	G	1568	16,80					NEK6213GK	D	1505	12,12								
					NEK6214Z	D (CSIR)	1523	16,80																
					NEK6214Z	D (CSR)	1537	16,80																
NEU					NEU6187Z	E (CSIR)	1154	10,00									NEU2168U	E	749	16,80	NEU6181U	E	633	7,28
					NEU6187Z	E (CSR)	1163	10,00													NEU6214U	G (CSIR)	1085	12,12
					NEU6212Z	G (CSIR)	1571	14,30													NEU6214U	G (CSR)	1097	12,12
					NEU6212Z	G (CSR)	1579	14,30																
					NEU6214Z	G (CSIR)	1776	16,80																
					NEU6214Z	G (CSR)	1799	16,80																
NT	NT2152Z	G	610	26,2	NT6215Z	D	1794	17,4	NT2168GK(V)	G (CSIR)	566	14,5	NT6217GK(V)	G (CSIR)	1030	12,6	NT2160U(V)	D	604	17,4	NT6217UV	G (CSIR)	1005	14,5
					NT6215Z	G (CSIR)	1925	17,4	NT2168GK(V)	G (CSR)	610	14,5	NT6217GK(V)	G (CSR)	1072	12,6	NT2160UV	G	638	17,4	NT6217UV	G (CSR)	1028	14,5
					NT6215Z	G (CSR)	1933	17,4	NT2168GK(V)	D (CSIR)	580	14,5	NT6217GK(V)	D (CSIR)	1070	12,6	NT2170UV	D	672	20,4	NT6220UV	G	1356	17,4
					NT6217Z	G (CSIR)	1982	20,4	NT2168GK(V)	D (CSR)	616	14,5	NT6217GK(V)	D (CSR)	1115	12,6	NT2170U(V)	G	772	20,4	NT6222UV	G	1522	20,4
					NT6217Z	G (CSR)	2013	20,4	NT2168GS	R	578	14,5	NT6220GKV	G (CSIR)	1240	14,5	NT2180UV	D	830	22,4	NT6224UV	D	1744	22,4
					NT6217Z	D (CSIR)	2126	20,4	NT2178GK(V)	G (CSIR)	734	17,4	NT6220GKV	G (CSR)	1250	14,5	NT2180UV	G	832	22,4				
					NT6217Z	D (CSR)	2157	20,4	NT2178GK(V)	G (CSR)	772	17,4	NT6220GKV	D (CSIR)	1247	14,5	NT2210UV	D	1051	27,8				
					NT6220Z	G	2361	22,4	NT2178GK(V)	D (CSIR)	751	17,4	NT6220GKV	D (CSR)	1283	14,5	NT2210UV	G	1060	27,8				
					NT6220Z	D	2420	22,4	NT2178GK(V)	D (CSR)	790	17,4	NT6222GK(V)	G (CSIR)	1565	17,4								
									NT2180GK(V)	G (CSIR)	823	20,4	NT6222GK(V)	G (CSR)	1569	17,4								
									NT2180GK(V)	G (CSR)	879	20,4	NT6222GK(V)	D (CSIR)	1475	17,4								
									NT2180GK(V)	D	854	20,4	NT6222GK(V)	D (CSR)	1537	17,4								
									NT2192GS	R	897	22,4	NT6224GKV	D	1808	20,4								
									NT2192GK(V)	G (CSIR)	904	22,4	NT6224GKV	G	1859	20,4								
									NT2192GK(V)	G (CSR)	943	22,4	NT6226GK(V)	G	1942	22,4								
									NT2192GK(V)	D	928	22,4	NT6226GK(V)	D (CSIR)	1985	22,4								
									NT2212GS	R	1155	27,8	NT6226GK(V)	D (CSR)	2009	22,4								
									NT2212GKV	G	1183	27,8												
									NT2212GK(V)	D	1230	27,4												
NTU					NTU6222ZV	G	2882	23,7					NTU6232GSV	Z	2035	20,4								
					NTU6222ZV	D	2893	23,7					NTU6232GKV	G	2090	20,4								
					NTU6224ZV	G	3355	27,8					NTU6232GKV	D	2101	20,4								
					NTU6224ZV	D	3412	27,8					NTU6234GSV	Z	2378	23,7								
													NTU6234GKV	G	2419	23,7								
													NTU6234GKV	D	2477	23,7								
													NTU6238GSV	Z	2635	26,2								
													NTU6238GKV	D	2748	26,2								
													NTU6240GSV	Z	2779	27,8								
													NTU6240GKV	D	2860	27,8								
NJ					NJ6220Z	D	2391	26,1	NJ2192GK/J	G	968	26,1	NJ9226GK	D	2742	21,7								
					NJ6220Z	G	2674	26,1	NJ2192GK/J	D	970	26,1	NJ9226GS	M	2811	21,7								
					NJ6220ZX	M	2674	26,1	NJ2192GS	M	970	26,1	NJ9232GK	D	3479	26,1								
					NJ6226Z	D	2927	34,4	NJ2212GK/J	G	1173	34,4	NJ9232GS	M	3488	26,1								
					NJ6226ZX	M	3125	34,4	NJ2212GK/J	D	1183	34,4	NJ9238GK	J	3834	32,7								
									NJ2212GS	M	1273	34,4	NJ9238GS	M	4186	32,7								

Cool. Cap. @ Rated Point ARI

Volt./Freq.
B 200-230V/50Hz (208-230V/60 Hz 1 ~ D 208-230V/60Hz 1~ E 115-127V 60 Hz 1ph ~ G 115V/60Hz 1~ J 230V/60Hz 1~
M 380-420V/50Hz 3 ~ R 200V 50/60 Hz 3ph ~ Z 200-230V 60 Hz 3ph ~

COMPRESSOR SELECTION

HOW TO ORDER YOUR COMPRESSOR

Ordering Code

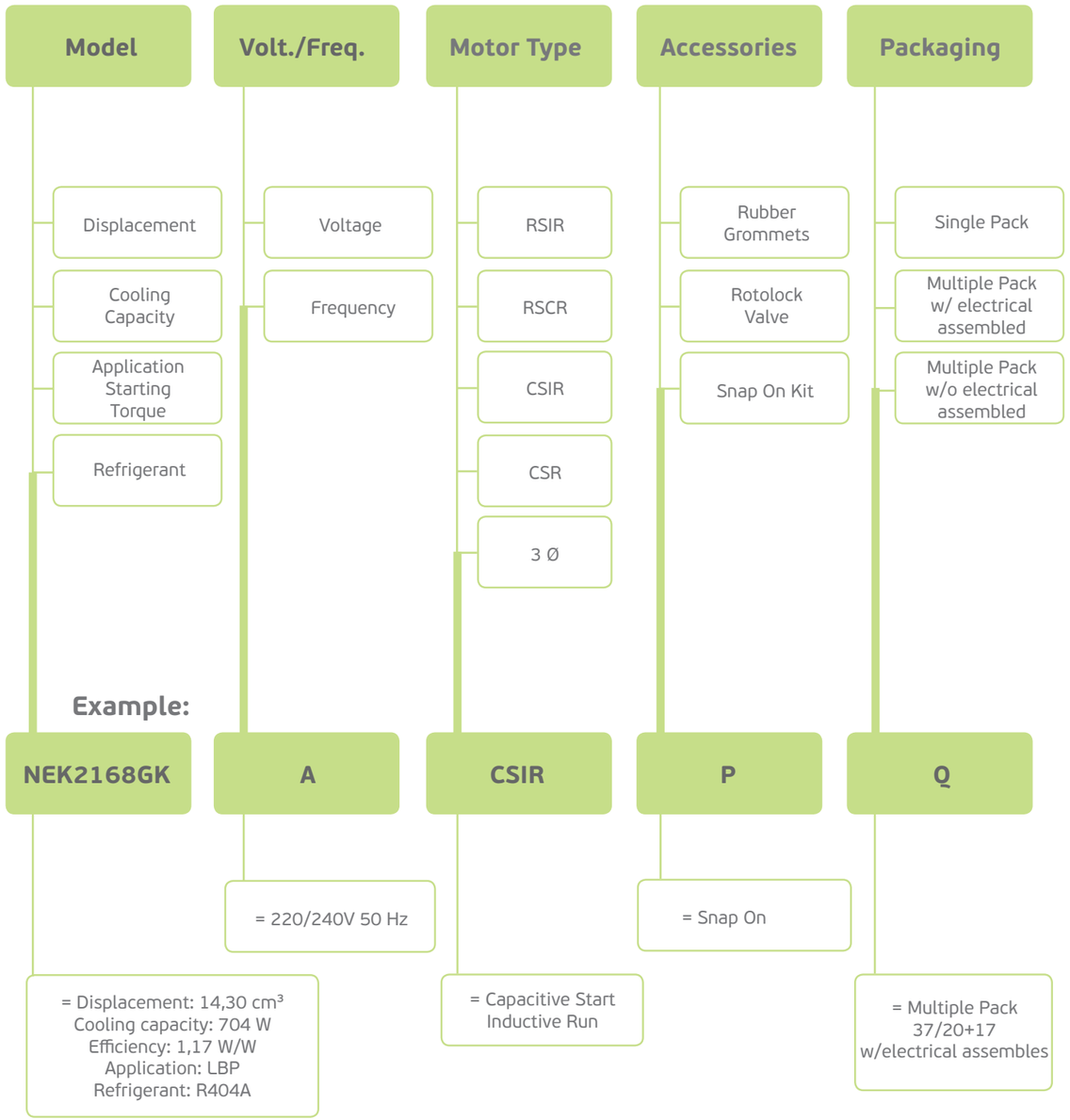

NOTE: not all combinations are possible

Nomenclature

EM/NE/NT/NJ

NE K 6 214 Z

COMPRESSOR FAMILIES
EM | NE | NT | NJ

EFFICIENCY LEVEL

__	First Generation
K	Second Generation
T	Third Generation
U	Fourth Generation
Y	Fifth Generation

APPLICATION CODE

1. LBP - LST
2. LBP - HST
3. L/MBP - LST
4. L/MBP - HST
5. MBP* or HBP* LST
6. MBP* or HBP* HST
7. A/C
9. M/HBP HST

COOLING CAPACITY

The first digit is the number of zeros that must be added to the last two digits to obtain the cooling capacity (approx) in kcal/h at 50Hz.
E.g.: 144=440 kcal/h at 50Hz.

REFRIGERANT CODE

GE - GF - GG	R407C 1~
GK - GJ	R404A/R507 1~
GS	R404A/R507 3~
GP	R407C 3~
R	Gas Recovery
U	R290 1~
V	R290 + R600a
Z	R134a 1~
ZX	R134a 3~
Y	R600a

The V letter at the end of the compressor name stands for IPR valve

EM

EM T 60 H L P

COMPRESSOR FAMILIES
EM

EFFICIENCY LEVEL

S	Standard
T	First Generation
U	Second Generation
Y	Third Generation
Z	Fourth Generation
X	Fifth Generation
2C	Sixth generation

COOLING CAPACITY

Rated cooling capacity divided by 10 expresse in Btu/h (subcooled liquid conditions) and referred to the frequency listed on the compressr name plate.

REFRIGERANT CODE

H = R134a
C = R600a
U = R290

APPLICATION CODE

L = LBP
H = M/HBP
D = HBP

ELECTRICAL COMPONENT

R = Relay
P = PTC + Opional Run Capacitor
C = PTC + Mandatory Run Capacitor
X = Relay + Mandatory Start Capacitor
T = TSD

(*) According to the refrigerant used

Families

FAMILIES	LBP				H/MBP			
	R134a	R404A	R290	R600	R134a	R404A	R290	R600a
EM	✓	✓	✓	✓	✓	✓	✓	✓
NEK/NEU	✓	✓	✓	✗	✓	✓	✓	✓
NT/NTU	✓	✓	✓	✗	✓	✓	✓	✗
NJ	✓	✓	✗	✗	✓	✓	✗	✗

Voltage & Frequencies

Code	Voltage & Frequency	Voltage Working Range		Minimum Start Voltage	
		50Hz	60Hz	50Hz	60Hz
A	220-240V/50Hz 1 ~	198V - 254V		187V	
B	200-230V/50Hz (208-230V/60Hz) 1 ~	180V - 244V	187V-244V	170V	177V
C	220V/50Hz 1 ~	200V - 242V		187V	
D	208-230V/60Hz 1 ~		187V - 244V		177V
E	115-127V/60Hz		103 - 134V		98V
G	115V/60Hz 1 ~		103V-127V		98V
J	230V/60Hz 1 ~		207V-253V		195V
K	200-220 V 50 Hz 1~ / (230 V 60 Hz 1~)	180V-234V	207V-253V	170V	195V
M	380-420V/50Hz (440-480V/60Hz) 3 ~	332V-445V	396-509V	323V	374V
N	200-240V/50Hz (230V/60Hz) 1 ~	180V-254V	207V-253V	170V	195V
Q	100V 50/60Hz	90-110V	90-110V	85V	85V
R	200V/50-60Hz 3 ~	180V-220V	180V-220V	170V	170V
V	230V/50Hz 1 ~	207V-253V		195V	
Z	200-230V/60Hz 1 ~		180V-244V		170V

Fan Cooling Characteristic

	m³/h	COMPRESSOR
FREE AIRFLOW	270 or 520*	EMT
	520	NEK - NT
	800	NJ

(*) For specific model see catalogue data page

Cooling Type

S — **Static Cooling:** the compressor does not require forced cooling, but it must be installed so that the ambient air can adequately cool to avoid overheating

F — **Fan Cooling:** the compressor requires forced cooling through the use of a fan

Electrical motor starting torque

LST
Low Starting Torque:
Compressors with RSIR-RSCR-PSC electrical motors for systems with capillary tube and with balanced pressures at start up.

HST
High Starting Torque:
Compressors with CSIR-CSR and 3ph electrical motors for systems with balanced or unbalanced pressures at start up.

Electrical motor types

RSIR
Resistence Start – Inductive Run
This motor type, used in the compressor of small power, has a low starting torque (LST) and must be applied only to capillary tube systems where the pressures equalize. The motor is characterized by a start winding with high ohmic resistance and must be disconnected when it reaches the stabilized rotational speed. An electromagnetic relay, calibrated for the motor current, disconnects the start winding at the end of the start up. An alternative to the electromagnetic relay is, for some models, a PTC solid state-starting device.

RSCR
Resistance Start – Capacitive Run
Similar to RSIR motor version but uses a PTC solid state starting device and a permanent connected run capacitor to improve its efficiency.

CSIR
Capacitive Start – Inductive Run
Similar to RSIR motor, with a different start winding in series with a start capacitor of suitable capacitance to get a high starting torque.

CSR
Capacitive Start & Run
CSR version with capacitive run and start windings. Same as PSC motor but with a start capacitor in series with the start winding. A potential starting relay, calibrated for each motor, disconnects the start capacitor at the end of the start. The motor is characterized by a high starting torque (HST) and high efficiency.

PSC
Permanent Split Capacitor:
PSC version with capacitive run winding. This motor is characterized by the run capacitor permanently connected in series with the start winding; both remain connected even after the motor starts. The starting torque is enough to guarantee that the compressor starts only with balanced pressures in capillary tubes systems or with a pressure equalizer.

3Ø
Three Phase
Three-phase windings with star connections

Electrical components

Motor Type	Overload Protector	Starting Device			Capacitors	
		Current Relay	Voltage Relay	PTC	Start	Run
RSIR	✓	✓	✗	✓	✗	✗
RSCR	✓	✗	✗	✓	✗	✓
CSIR	✓	✓	✗	✗	✓	✗
CSR	✓	✗	✓	✗	✓	✓
PSC	✓	✗	✗	✗	✗	✓

Accessories & Options

	ACCESSORIES & OPTIONS			
	EMT	NEK	NT	NJ
A	Only Rubber Grommets	Only Rubber Grommets	Only Rubber Grommets	Only Rubber Grommets
P	snap-on kit	snap-on kit	✗	✗
V	✗	✗	✗	Rotolock Valve Mechanical
Z	✗	✗	✗	Rotolock Valve Solder

Assembling Accessories

A. SLEEVE & SCREW

Screw and Washer are not part of delivery

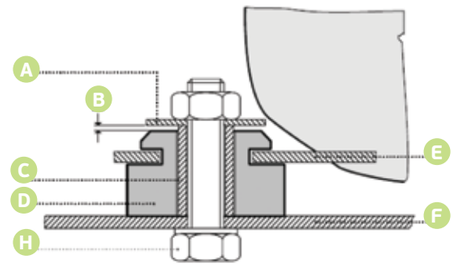

P. SNAP ON

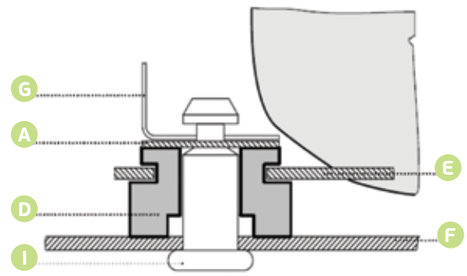

Rubber Grommets Assembling Process:

- A Washer
- B Gap
- C Sleeve
- D Grommets
- E Base Plate
- F Mounting Base
- G Clip
- H Screw
- I Pin

Rotolock Valve

V. THREADED CONNECTION

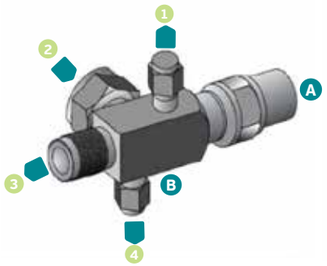

Z. BRAZED CONNECTION

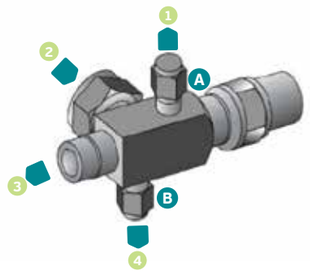

1. Attachement for service or for a manometer
2. Connection to the receiver or to the compressor
3. Main port
4. Connections for pressure-stat

A & B Service caps (hexagonal nuts)

NT/NJ Gemini

Gemini is a product line that matches low noise and short height for typical semi-hermetic solution. Through an especial shape Embraco designed an hermetic light commercial compressors which can be embedded in appliances, considering individual or dual mode, it means a modular cooling capacity when demanded. These products are available in condensing units and also only compressors.

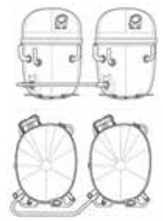

Packaging code

EMT/EMY/EMX

SINGLE MULTIPLE PACK	CODE	QTY COMPRESSORS	LAYERS	ELECTRICAL COMPONENTS ASSEMBLED	ELECTRICAL COMPONENTS NOT ASSEMBLED	NOTES
SINGLE PACK	A	70	14+14+14+14+14	✓	✗	excluded capacitor
MULTIPLE PACK	R	100	20+20+20+20+20	✗	✓	grommets and sleves delivered separately
	S	120	20+20+20+20+20+20	✗	✓	
	G	100	20+20+20+20+20	✓	✗	
	N	37	20+17	✓	✗	and accessories included
	O	74	20+20+20+14	✓	✗	and accessories included

NE/NEK/NEU

SINGLE MULTIPLE PACK	CODE	QTY COMPRESSORS	LAYERS	ELECTRICAL COMPONENTS ASSEMBLED	ELECTRICAL COMPONENTS NOT ASSEMBLED	NOTES
SINGLE PACK	A	56	14+14+14+14	✓	✗	excluded capacitor
	F	44	11+11+11+11	✗	✓	with electrical box inside pack
	J	56	14+14+14+14	✓	✗	including capacitor
MULTIPLE PACK	H	28	14+14	✓	✗	with electrical box inside pack
	M	80	20+20+20+20	✗	✓	electricals packed in separate carton box
	N	40	20+20	✗	✓	electricals packed in separate carton box
	O	74	20+17+20+17	✓	✗	
	Q	37	20+17	✓	✗	

NT/NTU

SINGLE MULTIPLE PACK	CODE	QTY COMPRESSORS	LAYERS	ELECTRICAL COMPONENTS ASSEMBLED	ELECTRICAL COMPONENTS NOT ASSEMBLED	NOTES
SINGLE PACK	A	44	14+14+14+14	✓	✗	excluded capacitor
	F	44	11+11+11+11	✗	✓	with electrical box inside pack
MULTIPLE PACK	C	36	18+18	✗	✓	
	Z	24	12+12	✓	✗	

NJ

SINGLE MULTIPLE PACK	CODE	QTY COMPRESSORS	LAYERS	ELECTRICAL COMPONENTS ASSEMBLED	ELECTRICAL COMPONENTS NOT ASSEMBLED	NOTES
SINGLE PACK	A	33	11+11+11	✗	✓	excluded capacitor
	F	33	11+11+11	✗	✗	with electrical box inside pack
MULTIPLE PACK	C	36	18+18	✗	✓	
	Y	28	14+14	✓	✗	

Model | Volt./Freq. | Motor Type | Accessories | Packaging

Load Characteristics for 20 ft container

SERIES	FIRST LAYER PACK Nº - Nº COMP.	SECOND LAYER PACK Nº - Nº COMP.	THIRD LAYER PACK Nº - Nº COMP.	TOTAL Nº OF COMPRESSORS
EM	14 - 120	14 - 60	4	2.520
NE 1	14 - 72	11 – 72 2	4	1.800
	14 - 72	13 – 73 2	4	1.944
NT 1	14 - 36	14 - 36	7 – 36 4	1.260
	14 - 72	14 - 36	4	1.512
NJ	14 - 36	11 - 36 2	4	900

1. The different load structure (1.800 or 1.944 NE/NEK series compressors - 1.260 or 1.512 NT compressors) is determined by the ratio between the maximum container weight and the compressor weight.
2. No. [3] package filler is added (containing all the equipped components).
3. A package as filler packaging, containing part of the equipped components is added.
4. Type of load which is rarely used. To be avoided due to an incomplete [3]rd layer.
5. Packages are added containing the equipped components.

Identification Label

NEK/NEU/NT/NTU/NJ label

1. Compressor model
2. Supply Voltage
3. Bill of Materials code
4. Serial Number
5. Agency Approval Marks
6. Date code or Production date
7. Oil type and quantity
8. Refrigerant type
9. Current Consumption (Rated Load Amperage, when applicable)
10. Locked Rotor Amperage (when applicable)

EM label

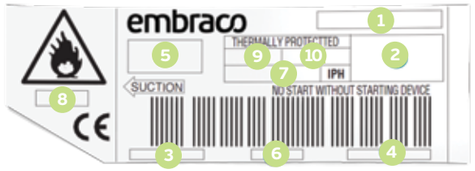

1. Compressor model
2. Supply Voltage
3. Bill of Materials code
4. Serial Number
5. Agency Approval Marks
6. Date code or Production date
7. Oil type and quantity
8. Refrigerant type
9. Current Consumption (Rated Load Amperage, when applicable)
10. Locked Rotor Amperage (when applicable)

GENERAL DATA & PERFORMANCE

Table index

How to read our catalogue

Example:

R134a 1

2 **LBP 50Hz** 3

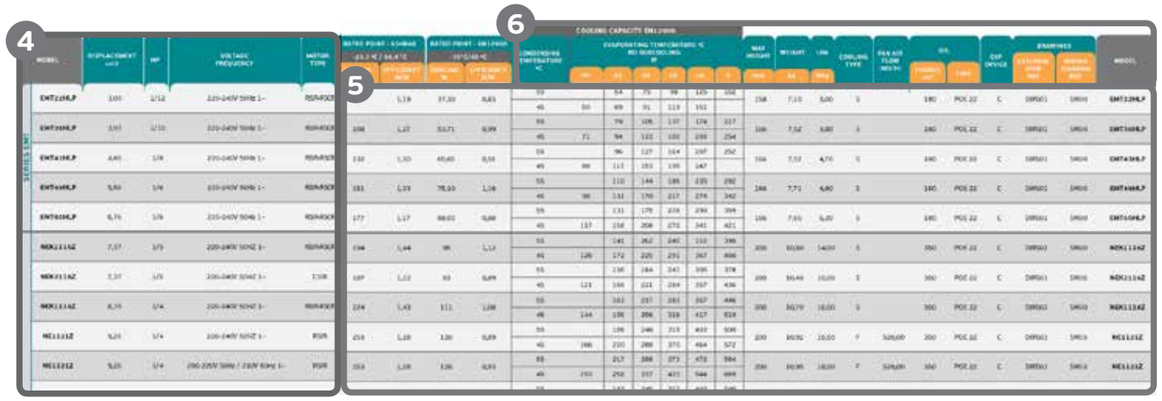

1. Grouped by refrigerant type
2. Grouped by Application Type
3. Data classified by supply frequency
4. Model Selection
5. Cooling capacity
   @ rated point
   ASHRAE & EN12900 or ARI or CECOMAF
6. Operative Range of evaporating temp

R134a
LBP 50Hz

	SERIES MODEL	DISPLACEMENT cm³	HP	VOLTAGE FREQUENCY	MOTOR TYPE	RATED POINT - ASHRAE -23,3 °C / 54,4 °C COOLING W	RATED POINT - ASHRAE -23,3 °C / 54,4 °C EFFICIENCY W/W	RATED POINT - EN12900 -35°C/40 °C COOLING W	RATED POINT - EN12900 -35°C/40 °C EFFICIENCY W/W	COOLING CAPACITY EN12900 CONDENSING TEMPERATURE °C	EVAPORATING TEMPERATURE °C NO SUBCOOLING W -30	-25	-20	-15	-10	-5	WEIGHT kg	MAX HEIGHT mm	LRA A	COOLING TYPE	FAN AIR FLOW (m³/h)	OIL CHARGE cm³	OIL TYPE	EXP DEVICE	DRAWINGS EXTERNAL VIEW REF.	DRAWINGS WIRING DIAGRAM REF.	MODEL
EMT	EMT22HLP	3,01	1/12	220-240V 50Hz 1~	RSIR-RSCR	75	1,19	37	0,83	55		54	75	98	125	152	7,1	158	3,0	S	-	180	POE 22	C	DWG01	SM00	EMT22HLP
										45	50	69	91	119	151												
EMT	EMT36HLP	3,97	1/10	220-240V 50Hz 1~	RSIR-RSCR	108	1,27	54	0,99	55		79	105	137	174	217	7,5	166	3,8	S	-	180	POE 22	C	DWG01	SM00	EMT36HLP
										45	71	94	123	160	203	254											
EMT	EMT43HLP	4,85	1/8	220-240V 50Hz 1~	RSIR-RSCR	132	1,30	66	0,91	55		96	127	164	207	252	7,5	166	4,7	S	-	180	POE 22	C	DWG01	SM00	EMT43HLP
										45	86	117	153	195	247												
EMT	EMT49HLP	5,57	1/6	220-240V 50Hz 1~	RSIR-RSCR	151	1,33	78	1,16	55		110	144	186	235	292	7,7	166	4,8	S	-	180	POE 22	C	DWG01	SM00	EMT49HLP
										45	98	131	170	217	274	342											
EMT	EMT60HLP	6,76	1/6	220-240V 50Hz 1~	RSIR-RSCR	177	1,17	88	0,88	55		131	175	228	290	359	7,6	166	6,2	S	-	180	POE 22	C	DWG01	SM00	EMT60HLP
										45	117	158	208	270	341	421											
NE/NEK	NEK1116Z	7,40	1/5	220-240V 50HZ 1~	RSIR-RSCR	194	1,44	93	1,12	55		141	262	245	312	390	10,8	200	14,0	S	-	350	POE 22	C	DWG02	SM00	NEK1116Z
										45	126	172	225	291	367	460											
NE/NEK	NEK2116Z	7,40	1/5	220-240V 50HZ 1~	CSIR	187	1,22	93	0,89	55		136	184	241	305	378	10,4	200	10,0	S	-	350	POE 22	C	DWG03	SM05	NEK2116Z
										45	121	166	221	284	357	436											
NE/NEK	NEK1118Z	8,40	1/4	220-240V 50HZ 1~	RSIR-RSCR	224	1,43	111	1,08	55		163	217	283	357	446	10,7	200	16,0	S	-	350	POE 22	C	DWG02	SM00	NEK1118Z
										45	144	195	256	328	417	519											
NE/NEK	NE1121Z	9,27	1/4	220-240V 50HZ 1~	RSIR	253	1,28	125	0,89	55		186	246	319	403	500	10,9	200	16,5	F	520	350	POE 22	C	DWG03	SM03	NE1121Z
										45	166	220	288	370	464	572											
NE/NEK	NE1121Z	9,27	1/4	200-220V 50Hz / 230V 60Hz 1~	RSIR	253	1,28	126	0,93	55		217	288	373	472	584	10,9	200	18,0	F	520	350	POE 22	C	DWG03	SM03	NE1121Z
										45	193	258	337	433	544	669											
NE/NEK	NE2121Z	9,27	1/4	220-240V 50Hz 1~	CSIR	250	1,23	124	0,86	55		183	245	317	403	500	10,9	200	12,6	F	520	350	POE 22	C/V	DWG03	SM05	NE2121Z
										45	163	217	285	368	465	575											
NE/NEK	NE2121Z	9,27	1/4	200-220V 50Hz / 230V 60Hz 1~	CSIR	253	1,28	126	0,90	55		186	246	319	403	500	10,9	200	15,0	F	520	350	POE 22	C/V	DWG03	SM05	NE2121Z
										45	166	220	288	370	464	572											
NE/NEK	NE1130Z	12,12	1/3	220-240V 50Hz 1~	RSIR	323	1,32	161	0,85	55		238	313	402	506	624	10,9	200	16,3	F	520	350	POE 22	C	DWG03	SM03	NE1130Z
										45	211	281	366	466	583	715											
NE/NEK	NE1130Z	12,12	1/3	200-220V 50Hz / 230V 60Hz 1~	RSIR	323	1,24	161	0,86	55		238	313	402	506	624	10,9	200	22,0	F	520	350	POE 22	C	DWG03	SM03	NE1130Z
										45	211	281	366	466	583	715											
NE/NEK	NE2130Z	12,12	1/3	200-220V 50Hz / 230V 60Hz 1~	CSIR	314	1,22	156	0,85	55		230	305	391	490	601	11,6	200	17,0	F	520	350	POE 22	C/V	DWG03	SM05	NE2130Z
										45	204	268	348	444	555	684											
NE/NEK	NE2130Z	12,12	1/3	220-240V 50Hz 1~	CSIR	343	1,32	171	0,85	55		255	332	426	536	660	10,9	200	13,2	F	520	350	POE 22	C/V	DWG03	SM05	NE2130Z
										45	227	298	386	491	613	753											
NE/NEK	NE2130Z	12,12	1/3	100V 50-60HZ 1~	CSIR	323	1,20	161	1,16	55		230	305	391	490	601	10,9	200	32,0	F	520	350	POE 22	C/V	DWG03	SM05	NE2130Z
										45	204	268	348	444	555	684											
NE/NEK	NE2134Z	14,30	1/3	220-240V 50Hz 1~	CSIR	359	1,23	179	0,90	55		267	351	453	571	711	11,6	206	17,0	F	520	350	POE 22	C/V	DWG03	SM05	NE2134Z
										45	234	313	410	526	662	822											
NE/NEK	NEK2140Z	16,80	1/2	220-240V 50Hz 1~	CSIR	437	1,28	217	1,02	55		319	421	543	686	820	11,6	206	17,0	F	520	350	POE 22	C/V	DWG03	SM05	NEK2140Z
										45	274	372	493	635	799	991											

NOTE: performance curves are calculated from Ashrae actual curves.

R134a
HBP 50Hz

	SERIES MODEL	DISPLACEMENT cm³	HP	VOLTAGE FREQUENCY	MOTOR TYPE	RATED POINT - ASHRAE 7,2 °C / 54,4 °C COOLING W	RATED POINT - ASHRAE 7,2 °C / 54,4 °C EFFICIENCY W/W	RATED POINT - EN12900 5°C/50 °C COOLING W	RATED POINT - EN12900 5°C/50 °C EFFICIENCY W/W	COOLING CAPACITY EN12900 CONDENSING TEMPERATURE °C	EVAPORATING TEMPERATURE °C NO SUBCOOLING W -15	-10	-5	0	5	10	WEIGHT kg	MAX HEIGHT mm	LRA A	COOLING TYPE	FAN AIR FLOW (m³/h)	OIL CHARGE cm³	OIL TYPE	EXP DEVICE	DRAWINGS EXTERNAL VIEW REF.	DRAWINGS WIRING DIAGRAM REF.	MODEL
EMT/EMTE	EMT37HDP	3,40	1/8	200-230V 50Hz / 208-230V 60Hz 1~	RSIR	351	2,56	321	2,46	55		150	189	237	298	361	7,2	166	4,3	S	-	180	POE 22	C	DWG01	SM00	EMT37HDP
										45	146	184	229	284	343	423											
	EMT37HDP	3,40	1/8	220-240V 50Hz 1~	RSIR	351	2,55	321	2,46	55		153	194	241	294	355	7,2	158	4,3	S	-	180	POE 22	C	DWG01	SM00	EMT37HDP
										45	142	181	228	245	343	412											
	EMT50HDP	4,50	1/6	200-230V 50Hz / 208-230V 60Hz 1~	RSIR	474	2,58	427	2,54	55		203	257	319	390	469	7,7	166	9,1	S	-	180	POE 22	C	DWG01	SM00	EMT50HDP
										45	187	240	303	324	458	549											
	EMT45HDR	3,97	1/8	220-240V 50Hz 1~	CSIR	421	2,66	379	2,58	55		150	189	237	298	361	7,7	166	5,4	S	-	180	POE 10	C/V	DWG01	SM05	EMT45HDR
										45	146	184	229	284	402	423											
	EMT50HDP	4,50	1/6	220-240V 50Hz 1~	RSIR	475	2,58	423	2,47	55		203	256	318	388	472	7,7	166	5,4	S	-	180	POE 22	C	DWG01	SM00	EMT50HDP
										45	191	242	303	374	456	549											
	EMT6144Z	5,20	1/5	220-240V 50Hz 1~	CSIR	577	2,6	519	2,53	55		250	313	388	474	573	7,8	166	8,5	F	270	180	POE 22	C/V	DWG01	SM05	EMT6144Z
										45	232	294	367	395	549	661											
	EMT6160Z	6,76	1/4	220-240V 50Hz 1~	CSIR	720	2,4	648	2,34	55		322	403	495	600	718	7,8	166	9,8	F	520	180	POE 22	C/V	DWG01	SM05	EMT6160Z
										45	298	377	469	504	696	830											
	EMT6170Z	7,69	1/4	220-240V 50Hz 1~	CSIR	806	2,26	725	2,18	55		358	448	550	663	789	7,8	166	10,4	F	520	180	POE 22	C/V	DWG01	SM05	EMT6170Z
										45	330	418	522	559	771	915											
	EMTE6187Z	9,50	1/1	220-240 / 50 Hz	CSIR	943	2,52	975	2,87	55		485	592	732	906	1081	8,6	171	16,5	F	520	210	POE 22	C/V	DWG01	SM05	EMT6187Z
										45	356	460	564	705	871	1037											
NEK	NEK6160Z	7,28	1/4	220-240V 50Hz 1~	CSIR	716	2,41	663	2,41	55		296	376	472	586	716	10,4	187	11,5	F	520	350	POE 22	C/V	DWG03	SM05	NEK6160Z
										45	281	355	448	481	687	834											
	NEK6160Z	7,28	1/4	200-230V 50Hz / 208-230V 60Hz 1~	CSIR	717	2,41	663	2,41	55		290	371	470	586	720	10,4	187	13,5	F	520	350	POE 22	C/V	DWG03	SM05	NEK6160Z
										45	277	350	442	478	684	833											
	NEK6170Z	8,40	1/4	220-240V 50Hz 1~	CSIR	837	2,41	775	2,45	55		360	453	562	689	833	10,4	187	12,4	F	520	350	POE 22	C/V	DWG03	SM05	NEK6170Z
										45	336	422	527	572	798	964											
	NEK6170Z	8,40	1/4	200-230V 50Hz / 208-230V 60Hz 1~	CSIR	841	2,44	775	2,46	55		358	451	563	693	841	10,8	200	16,5	F	520	350	POE 22	C/V	DWG03	SM05	NEK6170Z
										45	335	420	526	573	802	971											
	NEK6170Z	8,40	1/4	100V 50/60Hz 1~	CSIR	823	2,18	762	2,16	55		313	384	496	650	844	10,4	187	34	F	520	350	POE 22	C/V	DWG03	SM05	NEK6170Z
										45	337	367	445	505	742	958											
	NEK6187Z	10,00	1/3	220-240V 50Hz 1~	CSIR	967	2,36	896	2,38	55		402	511	642	793	965	11,0	200	16,1	F	520	350	POE 22	C/V	DWG03	SM05	NEK6187Z
										45	378	477	600	654	918	1113											
	NEK6187Z	10,00	1/3	200-230V 50Hz / 208-230V 60Hz 1~	CSIR	965	2,39	894	2,40	55		439	538	657	796	955	11,6	206	19,3	F	520	350	POE 22	C/V	DWG03	SM05	NEK6187Z
										45	375	479	606	669	928	1123											
	NEK6210Z	12,12	1/3	200-230V 50Hz / 208-230V 60Hz 1~	CSIR	1105	2,13	1024	2,16	55		454	554	699	891	1128	11,6	206	19,5	F	520	350	POE 22	C/V	DWG03	SM05	NEK6210Z
										45	469	523	637	711	1031	1314											
	NEK6210Z	12,12	1/3	220-240V 50Hz 1~	CSIR	1129	2,29	1046	2,29	55		480	619	773	942	1127	11,0	200	20	F	520	350	POE 22	C/V	DWG03	SM05	NEK6210Z
										45	456	578	726	787	1097	1319											
	NEK6212Z	14,30	1/2	200-230V 50Hz / 208-230V 60Hz 1~	CSR	1302	2,12	1206	2,14	55		565	712	882	1076	1291	11,6	206	19,5	F	520	350	POE 22	C/V	DWG03	SM06	NEK6212Z
										45	521	662	830	898	1249	1498											
	NEK6212Z	14,30	1/2	220-240V 50Hz 1~	CSIR	1314	2,09	1217	2,12	55		562	708	881	1081	1308	11,2	206	22,5	F	520	350	POE 22	C/V	DWG03	SM05	NEK6212Z
										45	534	665	828	897	1248	1504											
	NEK6214Z	16,80	1/2	220-240V 50Hz 1~	CSIR	1486	1,92	1315	1,90	55		640	814	1008	1215	1473	11,6	206	25,5	F	520	350	POE 22	C/V	DWG03	SM05	NEK6214Z
										45	593	752	945	1026	1412	1701											
NEU	NEU6210Z	12,12	1/2	220-240V 50Hz 1~	CSIR	1231	2,37	1102	2,33	55		530	663	825	1016	1235	10,6	200	18,5	F	520	350	POE 22	C/V	DWG03	SM05	NEU6210Z
										45	489	615	770	955	1170	1414											
	NEU6210Z	12,12	1/2	220-240V 50Hz 1~	CSR	1247	2,58	1109	2,48	55		530	672	839	1032	1250	10,6	200	18,5	F	520	350	POE 22	C/V	DWG03	SM06	NEU6210Z
										45	483	618	780	969	1186	1431											
	NEU6212Z	14,30	1/2	220-240V 50Hz 1~	CSIR	1438	2,31	1271	2,22	55		595	767	965	1188	1437	11,2	200	20	F	520	350	POE 22	C/C	DWG03	SM06	NEU6212Z
										45	556	706	892	1111	1365	1653											
	NEU6212Z	14,30	1/2	220-240V 50Hz 1~	CSR	1456	2,52	1288	2,41	55		616	779	974	1201	1461	11,2	200	20	F	520	350	POE 22	C/C	DWG03	SM06	NEU6212Z
										45	552	712	903	1126	1380	1665											
	NEU6214Z	16,80	1/2	220-240V 50Hz 1~	CSIR	1636	2,14	1459	2,12	55		724	909	1124	1367	1640	11,6	206	22	F	520	350	POE 22	C/V	DWG03	SM05	NEU6214Z
										45	657	836	1047	1292	1569	1880											
	NEU6214Z	16,80	1/2	220-240V 50Hz 1~	CSR	1678	2,45	1492	2,35	55		738	927	1150	1407	1699	11,6	206	22	F	520	350	POE 22	C/V	DWG03	SM06	NEU6214Z
										45	663	844	1063	1320	1615	1946											

NOTE: performance curves are calculated from Ashrae actual curves.

R134a
HBP 50Hz

	SERIES MODEL	DISPLACEMENT cm³	HP	VOLTAGE FREQUENCY	MOTOR TYPE	RATED POINT - ASHRAE 7,2 °C / 54,4 °C COOLING W	RATED POINT - ASHRAE 7,2 °C / 54,4 °C EFFICIENCY W/W	RATED POINT - EN12900 5°C/50 °C COOLING W	RATED POINT - EN12900 5°C/50 °C EFFICIENCY W/W	COOLING CAPACITY EN12900 CONDENSING TEMPERATURE °C	EVAPORATING TEMPERATURE °C NO SUBCOOLING W -15	-10	-5	0	5	10	WEIGHT kg	MAX HEIGHT mm	LRA A	COOLING TYPE	FAN AIR FLOW (m³/h)	OIL CHARGE cm³	OIL TYPE	EXP DEVICE	DRAWINGS EXTERNAL VIEW REF.	DRAWINGS WIRING DIAGRAM REF.	MODEL
NT/NTU	NT6215Z	17,4	1/2	200-240V 50Hz / 230V 60Hz 1~	CSIR	1607	2,52	1405	2,38	55		661	829	1033	1282	1582	17,0	220	20,7	F	520	450	POE 22	C/V	DWG15	SM19	NT6215Z
										45	627	796	998	1241	1533	1883											
	NT6215Z	17,4	1/2	220V 50Hz 1~	CSIR	1620	2,29	1435	2,25	55		646	843	1071	1326	1606	17,0	207	21	F	520	450	POE 22	C/V	DWG15	SM19	NT6215Z
										45	621	796	1014	1090	1567	1894											
	NT6217Z	20,4	3/4	220-240V 50Hz 1~	CSIR	1863	2,31	1655	2,20	55		791	991	1234	1521	1853	17,0	220	25	F	520	450	POE 22	C/V	DWG15	SM19	NT6217Z
										45	754	938	1173	1256	1795	2185											
	NT6217Z	20,4	3/4	220-240V 50Hz 1~	CSR	1963	2,67	1695	2,42	55		799	1010	1271	1582	1945	17,0	220	25	F	520	450	POE 22	C/V	DWG15	SM21	NT6217Z
										45	754	947	1196	1294	1867	2294											
	NT6217Z	20,4	3/4	200-240V 50Hz / 230V 60Hz 1~	CSIR	1863	2,41	1619	2,20	55		764	961	1196	1473	1800	17,0	220	25	F	520	450	POE 22	C/V	DWG15	SM19	NT6217Z
										45	712	912	1148	1428	1757	2143											
	NT6217Z	20,4	3/4	200-240V 50Hz / 230V 60Hz 1~	CSR	1943	2,67	1680	2,40	55		772	980	1232	1532	1890	17,0	220	25	F	520	450	POE 22	C/V	DWG15	SM21	NT6217Z
										45	712	921	1171	1471	1827	2250											
	NT6220Z	22,4	3/4	200-240V 50HZ/230V 60Hz 1~	CSIR	2016	2,34	1744	2,13	55		852	1060	1303	1586	1915	17,2	220	29,5	F	520	450	POE 22	C/V	DWG15	SM19	NT6220Z
										45	800	1011	1260	1554	1897	2294											
	NT6220Z	22,4	3/4	200-240V 50Hz/230V 60Hz 1~	CSR	2016	2,55	1752	2,34	55		861	1081	1342	1649	2011	17,2	220	28	F	520	450	POE 22	C/V	DWG15	SM21	NT6220Z
										45	808	1021	1285	1601	1973	2409											
	NTU6222ZV	23,7	3/4	220-240V 50Hz 1~	CSCR	2424	3,09	2117	2,89	55		1044	1305	1605	1955	2365	18,3	253	30	F	520	650	POE 22	C/V	DWG19	SM26	NTU6222ZV
										45	968	1225	1521	1866	2273	2754											
	NTU6224ZV	27,8	1	220-240V 50Hz 1~	CSCR	2767	3,00	2582	2,94	55		1272	1574	1921	2325	2795	18,3	253	30	F	520	650	POE 22	C/V	DWG19	SM26	NTU6224ZV
										45	1179	1484	1834	2242	2720	3277											
NJ	NJ6220Z	26,1	3/4	220-240V 50Hz 1~	CSIR	2547	2,60	2021	2,16	55		875	1147	1459	1826	2260	20,5	265	35,0	F	800	750	POE 22	C/V	DWG14	SM14	NJ6220Z
										45	822	1104	1419	1780	2202	2699											
	NJ6220ZX	26,1	3/4	380-420V 50Hz / 440-480V 60Hz 3 ~	3PHASE	2547	2,91	2240	2,40	55		993	1326	1693	2096	2534	19,6	265	10,0	F	800	750	POE 22	C/V	DWG14	SM18	NJ6220ZX
										45	882	1159	1502	1723	2389	2932											
	NJ6226Z	34,4	1	220-240V 50Hz 1~	CSCR	2976	2,41	2610	2,20	55		1182	1531	1923	2371	2886	19,8	253	31,0	F	800	750	POE 22	C/V	DWG14	SM17	NJ6226Z
										45	1144	1497	1892	2340	2852	3438											
	NJ6226ZX	34,4	1	380-420V 50Hz / 440-480V 60Hz 3 ~	3PHASE	2976	2,50	2740	2,40	55		1214	1589	2004	2457	2950	20,2	265	13,0	F	800	750	POE 22	C/V	DWG14	SM18	NJ6226ZX
										45	1304	1644	2044	2039	3027	3608											

NOTE: performance curves are calculated from Ashrae actual curves.

R134a
LBP 60Hz

	SERIES MODEL	DISPLACEMENT cm³	HP	VOLTAGE FREQUENCY	MOTOR TYPE	RATED POINT - ASHRAE -23,3 °C / 54,4 °C COOLING W	RATED POINT - ASHRAE -23,3 °C / 54,4 °C EFFICIENCY W/W	RATED POINT - ARI 540 -23,3 °C/48,9 °C COOLING W	RATED POINT - ARI 540 -23,3 °C/48,9 °C EFFICIENCY W/W	COOLING CAPACITY ARI 540 CONDENSING TEMPERATURE °C	EVAPORATING TEMPERATURE °C NO SUBCOOLING W -30	-25	-20	-15	-10	-5	WEIGHT kg	MAX HEIGHT mm	LRA A	COOLING TYPE	FAN AIR FLOW (m³/h)	OIL CHARGE cm³	OIL TYPE	EXP DEVICE	DRAWINGS EXTERNAL VIEW REF.	DRAWINGS WIRING DIAGRAM REF.	MODEL
NE/NEK	NEK2116Z	7,40	1/5	115V 60Hz 1~	CSIR	216	1,17	171	0,92	55	295	432	615	844	213	1439	10,0	200	22,0	S	-	350	POE 22	C/V	DWG04	SM04	NEK2116Z
										45	417	577	780	1025	1312	1643											
	NE2121Z	9,27	1/4	115V 60Hz 1~	CSIR	278	1,09	204	0,81	55	109	147	195	252	319	395	11,0	200	29,0	F	520	350	POE 22	C/V	DWG04	SM04	NE2121Z
										45	132	176	230	295	371	457											
	NE2130Z	12,12	1/3	100V 50/60Hz 1~	CSIR	367	1,19	269	1,16	55	166	227	300	383	479	586	11,0	200	38,0	F	520	350	POE 22	C/V	DWG04	SM04	NE2130Z
										45	205	268	348	443	553	679											
	NE2130Z	12,12	1/3	115V 60Hz 1~	CSIR	367	1,19	269	0,88	55	166	227	300	383	479	586	11,0	200	38,0	F	520	350	POE 22	C/V	DWG04	SM04	NE2130Z
										45	205	268	348	443	553	679											
	NE2134Z	14,30	1/2	115V 60Hz 1~	CSIR	425	1,23	312	0,91	55	191	257	334	424	533	660	11,0	200	33,0	F	520	350	POE 22	C/V	DWG04	SM04	NE2134Z
										45	228	303	392	495	618	764											
	NE2134Z	14,30	1/2	208-230V 60Hz 1~	CSIR	409	1,24	300	0,92	55	188	252	332	425	533	654	11,6	206	21,0	F	520	350	POE 22	C/V	DWG04	SM04	NE2134Z
										45	230	302	392	498	622	763											
	NEK2140Z	16,80	1/2	115V 60Hz 1~	CSIR	500	1,19	390	0,94	55	236	314	417	546	698	876	11,0	206	40,0	F	520	350	POE 22	C/V	DWG04	SM04	NEK2140Z
										45	279	378	503	653	828	1030											
NT	NT2152ZV	26,2	1/2	115V 60Hz 1~	CSR	681	1,31	610	1,07	55	200	425	646	871	1104	1351	18,2	250	70,0	F	520	450	POE 22	C/V	DWG17	SM26	NT2152ZV
										45	380	593	814	1048	1303	1582											

NOTE: performance curves are calculated from Ashrae actual curves.

R134a

HBP 60Hz

	SERIES MODEL	DISPLACEMENT cm³	HP	VOLTAGE FREQUENCY	MOTOR TYPE	RATED POINT - ASHRAE 7,2 °C / 54,4 °C COOLING W	RATED POINT - ASHRAE 7,2 °C / 54,4 °C EFFICIENCY W/W	RATED POINT - ARI 540 7,2°C/54,4 °C COOLING W	RATED POINT - ARI 540 7,2°C/54,4 °C EFFICIENCY W/W	COOLING CAPACITY ARI 540 CONDENSING TEMPERATURE °C	EVAPORATING TEMPERATURE °C NO SUBCOOLING W -15	-10	-5	0	5	10	WEIGHT kg	MAX HEIGHT mm	LRA A	COOLING TYPE	FAN AIR FLOW (m³/h)	OIL CHARGE cm³	OIL TYPE	EXP DEVICE	DRAWINGS EXTERNAL VIEW REF.	DRAWINGS WIRING DIAGRAM REF.	MODEL
EMT	EMT37HDP	3,40	1/2	200-230V 50Hz / 208-230V 60Hz 1~	RSIR	422	2,48	378	2,22	55		184	231	286	348	417	7,7	166	5,4	S	-	180	POE 22	C	DWG01	SM00	EMT37HDP
										45	172	215	269	332	403	485											
EMT	EMT50HDP	4,50	1/2	200-230V 50Hz / 208-230V 60Hz 1~	RSIR	563	2,55	506	2,29	55		248	310	382	464	556	7,7	166	9,1	S	-	180	POE 22	C	DWG01	SM00	EMT50HDP
										45	232	289	360	441	534	642											
NEK	NEK6132Z	4,52	1/6	115V 60Hz 1~	CSIR	516	2,13	473	1,94	55		211	272	346	431	529	10	187	26,0	S	-	350	POE 22	C/V	DWG04	SM04	NEK6132Z
										45	192	250	322	408	505	617											
NEK	NEK6144Z	5,45	1/6	115V 60Hz 1~	CSIR	640	2,18	584	1,98	55		268	343	432	535	652	10,1	187	26,0	F	520	350	POE 22	C/V	DWG04	SM04	NEK6144Z
										45	245	315	399	499	612	740											
NEK	NEK6160Z	7,28	1/4	115V 60Hz 1~	CSIR	845	2,35	758	2,11	55		354	450	563	694	846	10,4	187	28,5	F	520	350	POE 22	C/V	DWG04	SM04	NEK6160Z
										45	327	418	529	657	803	967											
NEK	NEK6160Z	7,28	1/4	200-230V 50Hz / 208-230V 60Hz 1~	CSIR	845	2,41	758	2,17	55		351	450	563	693	839	10,4	187	13,5	F	520	350	POE 22	C/V	DWG04	SM04	NEK6160Z
										45	330	415	522	650	799	966											
NEK	NEK6170Z	8,40	1/4	115V 60Hz 1~	CSIR	978	2,34	878	2,10	55		423	527	655	804	974	10,4	187	28,5	F	520	350	POE 22	C/V	DWG04	SM04	NEK6170Z
										45	396	493	616	762	932	1126											
NEK	NEK6170Z	8,40	1/4	100V 50/60Hz 1~	CSIR	823	2,18	738	1,95	55		382	461	585	759	988	10,4	187	35,5	F	520	340	POE 22	C/V	DWG04	SM04	NEK6170Z
										45	404	448	535	673	866	1119											
NEK	NEK6170Z	8,40	1/4	200-230V 50Hz / 208-230V 60Hz 1~	CSIR	981	2,38	881	2,14	55		428	532	657	804	970	10,8	200	16,5	F	520	350	POE 22	C/V	DWG04	SM04	NEK6170Z
										45	393	495	620	767	937	1130											
NEK	NEK6187Z	10,00	1/3	200-230V 50Hz / 208-230V 60Hz 1~	CSIR	1115	2,30	1000	2,06	55		477	603	750	918	1109	11,6	206	19,3	F	520	350	POE 22	C/V	DWG04	SM04	NEK6187Z
										45	426	549	693	857	1044	1253											
NEK	NEK6187Z	10,00	1/3	115V 60Hz 1~	CSIR	1122	2,31	1007	2,07	55		476	597	746	921	1124	11,0	200	37,0	F	520	350	POE 22	C/V	DWG04	SM04	NEK6187Z
										45	442	555	697	868	1068	1295											
NEK	NEK6210Z	12,12	1/2	200-230V 50Hz / 208-230V 60Hz 1~	CSIR	1267	2,10	1138	1,88	55		507	614	782	1011	1299	11,6	206	20,0	F	520	350	POE 22	C/V	DWG04	SM04	NEK6210Z
										45	543	598	721	911	1167	1487											
NEK	NEK6210Z	12,12	1/3	115V 60Hz 1~	CSIR	1326	2,18	1190	1,96	55		575	722	895	1094	1319	11,0	200	37,0	F	520	350	POE 22	C/V	DWG04	SM04	NEK6210Z
										45	521	667	841	1041	1267	1520											
NEK	NEK6212Z	14,30	1/2	200-230V 50Hz / 208-230V 60Hz 1~	CSR	1474	1,97	1323	1,77	55		660	825	1011	1221	1450	11,6	206	22,5	F	520	350	POE 22	C/V	DWG04	SM06	NEK6212Z
										45	611	778	971	1188	1432	1700											
NEK	NEK6212Z	14,30	1/2	115V 60Hz 1~	CSIR	1517	1,98	1361	1,78	55		658	830	1028	1254	1506	11,6	206	40,0	F	520	350	POE 22	C/V	DWG04	SM04	NEK6212Z
										45	599	769	967	1193	1446	1728											
NEK	NEK6212Z	14,30	1/2	115V 60Hz 1~	CSR	1568	2,18	1407	1,96	55		658	830	1028	1254	1506	11,6	206	40,0	F	520	350	POE 22	C/V	DWG04	SM06	NEK6212Z
										45	599	769	967	1193	1446	1728											
NEK	NEK6214Z	16,80	1/2	208-230V 60Hz 1~	CSIR	1697	1,97	1523	1,77	55		731	921	1143	1396	1677	11,4	206	30,0	F	520	350	POE 22	C/V	DWG04	SM04	NEK6214Z
										45	671	851	1068	1321	1610	1933											
NEK	NEK6214Z	16,80	1/2	208-230V 60Hz 1~	CSR	1712	2,11	1537	1,89	55		740	929	1153	1410	1698	11,4	206	30,0	F	520	350	POE 22	C/V	DWG04	SM06	NEK6214Z
										45	686	865	1081	1331	1617	1937											
NEK	NEK6214Z	16,80	1/2	115V 60Hz 1~	CSR	1746	2,05	1568	1,84	55		748	948	1180	1443	1734	11,6	206	48,0	F	520	350	POE 22	C/V	DWG04	SM06	NEK6214Z
										45	689	875	1098	1357	1652	1980											
NEU	NEU6187Z	10,00	1/3	115V-127V 60Hz 1~	CSIR	1223	2,45	1154	2,23	55		501	680	908	1129	1278	10,7	200	39	F	520	350	POE 22	C/V	DWG04	SM04	NEU6187Z
										45	498	586	783	1031	1274	1455											
NEU	NEU6187Z	10,00	1/3	115V-127V 60Hz 1~	CSR	1236	2,62	1163	2,35	55		500	682	916	1145	1312	10,7	200	39	F	520	350	POE 22	C/V	DWG04	SM06	NEU6187Z
										45	503	592	792	1044	1291	1475											
NEU	NEU6212Z	14,30	1/2	115V 60Hz 1~	CSIR	1663	2,23	1571	2,10	55		746	934	1158	1417	1711	11,5	206	40	F	520	350	POE 22	C/V	DWG04	SM04	NEU6212Z
										45	675	856	1074	1330	1622	1951											
NEU	NEU6212Z	14,30	1/2	115V 60Hz 1~	CSR	1674	2,4	1579	2,27	55		754	946	1177	1444	1749	11,5	206	40	F	520	350	POE 22	C/V	DWG04	SM06	NEU6212Z
										45	668	857	1084	1349	1650	1989											
NEU	NEU6214Z	16,80	1/2	115V 60Hz 1~	CSIR	1884	2,09	1776	1,97	55		846	1067	1325	1618	1947	11,6	206	50	F	520	350	POE 22	C/V	DWG04	SM04	NEU6214Z
										45	763	973	1222	1512	1841	2210											
NEU	NEU6214Z	16,80	1/2	115V 60Hz 1~	CSR	1913	2,26	1799	2,13	55		847	1074	1338	1640	1978	11,6	206	50	F	520	350	POE 22	C/V	DWG04	SM06	NEU6214Z
										45	765	978	1230	1522	1854	2225											

U.D. = under development

NOTE: performance curves are calculated from Ashrae actual curves.

R134a
HBP 60Hz

	SERIES MODEL	DISPLACEMENT cm³	HP	VOLTAGE FREQUENCY	MOTOR TYPE	RATED POINT - ASHRAE 7,22°C/54,4 °C COOLING W	RATED POINT - ASHRAE 7,22°C/54,4 °C EFFICIENCY W/W	RATED POINT - ARI 540 7,2°C/54,4 °C COOLING W	RATED POINT - ARI 540 7,2°C/54,4 °C EFFICIENCY W/W	COOLING CAPACITY ARI 540 CONDENSING TEMPERATURE °C	EVAPORATING TEMPERATURE °C NO SUBCOOLING W -15	-10	-5	0	5	10	WEIGHT kg	MAX HEIGHT mm	LRA A	COOLING TYPE	FAN AIR FLOW (m³/h)	OIL CHARGE cm³	OIL TYPE	EXP DEVICE	DRAWINGS EXTERNAL VIEW REF.	DRAWINGS WIRING DIAGRAM REF.	MODEL
NT/NTU	**NT6215Z**	17,4	1/2	208-230V 60Hz 1~	CSIR	1876	2,25	1794	2,11	55		861	1085	1347	1648	1986	17,0	207	20,8	F	520	450	POE 22	C/V	DWG15	SM20	**NT6215Z**
										45	777	997	1256	1556	1895	2274											
	NT6215Z	17,4	1/2	115V 60Hz 1~	CSIR	1942	2,40	1925	2,37	55		893	1146	1439	1772	2144	16,5	207	44,0	F	520	450	POE 22	C/V	DWG15	SM20	**NT6215Z**
										45	818	1059	1334	1642	1985	2361											
	NT6215Z	17,4	1/2	115V 60Hz 1~	CSR	2015	2,61	1933	2,50	55		880	1121	1410	1743	2124	15,7	207	44,0	F	520	450	POE 22	C/V	DWG15	SM23	**NT6215Z**
										45	810	1043	1322	1652	2029	2454											
	NT6217Z	20,4	3/4	115V 60Hz 1~	CSIR	2186	2,21	1982	1,99	55		1040	1320	1635	1986	2372	17,5	220	45,0	F	520	450	POE 22	C/V	DWG15	SM20	**NT6217Z**
										45	950	1210	1520	1879	2285	2740											
	NT6217Z	20,4	3/4	115V 60Hz 1~	CSR	2189	2,29	2013	2,20	55		1051	1339	1655	2013	2425	17,5	220	45,0	F	520	450	POE 22	C/V	DWG15	SM23	**NT6217Z**
										45	956	1243	1558	1913	2320	2792											
	NT6217Z	20,4	3/4	208-230V 60Hz 1~	CSIR	2221	2,27	2126	2,18	55		999	1268	1581	1936	2336	16,7	220	31,0	F	520	450	POE 22	C/V	DWG15	SM20	**NT6217Z**
										45	922	1173	1474	1827	2229	2680											
	NT6217Z	20,4	3/4	208-230V 60Hz 1~	CSR	2287	2,58	2157	2,45	55		998	1267	1572	1935	2339	16,7	220	31,0	F	520	450	POE 22	C/V	DWG15	SM23	**NT6217Z**
										45	921	1170	1474	1829	2228	2680											
	NT6220Z	22,4	1	115V 60Hz 1~	CSIR	2431	2,22	2361	2,34	55		1169	1472	1810	2183	2592	17,0	220	54,5	F	520	450	POE 22	C/V	DWG17	SM20	**NT6220Z**
										45	1060	1334	1660	2036	2463	2941											
	NT6220Z	22,4	1	115V 60Hz 1~	CSR	2466	2,48	2361	2,47	55		1174	1476	1821	2196	2605	17,0	220	54,5	F	520	450	POE 22	C/V	DWG17	SM21	**NT6220Z**
										45	1067	1339	1668	2047	2481	2959											
	NT6220Z	22,4	1	208-230V 60Hz 1~	CSIR	2447	2,27	2420	2,09	55		1150	1450	1797	2198	2665	17,2	220	33,7	F	520	450	POE 22	C/V	DWG16	SM20	**NT6220Z**
										45	1061	1357	1696	2088	2540	3060											
	NTU6222ZV	23,7	1	115V 60Hz 1~	CSR	2965	2,96	2882	2,83	55		1322	1703	2138	2633	3185	18,3	250	70,0	F	520	650	POE 22	C/V	DWG19	SM26	**NTU6222ZV**
										45	1206	1575	2002	2490	3041	3654											
	NTU6222ZV	23,7	1	208-230V 60Hz 1~	CSR	2944	3,04	2893	2,91	55		1187	1628	2142	2678	3179	18,3	250	35,0	F	520	650	POE 22	C/V	DWG19	SM26	**NTU6222ZV**
										45	1111	1517	2014	2550	3068	3516											
	NTU6224ZV	27,8	1 1/4	115V 60Hz 1~	CSR	3471	2,82	3355	2,70	55		1590	2021	2508	3054	3664	18,1	250	78,0	F	520	650	POE 22	C/V	DWG19	SM26	**NTU6224ZV**
										45	1458	1881	2359	2898	3499	4167											
	NTU6224ZV	27,8	1 1/4	208-230V 60Hz 1~	CSR	3391	2,87	3412	2,70	55		1622	2050	2519	3011	3509	18,1	250	46,0	F	520	650	POE 22	C/V	DWG19	SM26	**NTU6224ZV**
										45	1501	1907	2396	2951	3522	4186											
NJ	**NJ6220Z**	26,1	1	208-230V 60Hz 1~	CSIR	2664	2,24	2391	2,01	55		955	1292	1687	2138	2644	20,3	265	42,0	F	800	750	POE 22	C/V	DWG14	SM14	**NJ6220Z**
										45	882	1226	1625	2077	2582	3138											
	NJ6220Z	26,1	1	115V 60Hz 1~	CSIR	2980	2,39	2674	2,14	55		1000	1334	1699	2100	2541	19,8	265	72,0	F	800	750	POE 22	C/V	DWG14	SM14	**NJ6220Z**
										45	886	1163	1506	1914	2387	2922											
	NJ6220ZX	26,1	1	380-420V 50Hz / 440-480V 60Hz 3~	3PHASE	2980	2,92	2674	2,62	55		1169	1560	1989	2457	2962	19,6	265	10,0	F	800	750	POE 22	C/V	DWG14	SM18	**NJ6220ZX**
										45	1036	1360	1763	2240	2793	3419											
	NJ6226Z	34,4	1 1/4	208-230V 60Hz 1~	CSR	3261	2,26	2927	2,03	55		1268	1680	2149	2673	3254	19,9	253	40,0	F	800	750	POE 22	C/V	DWG14	SM17	**NJ6226Z**
										45	1227	1621	2073	2583	3150	3772											
	NJ6226ZX	34,4	1	380-420V 50Hz / 440-480V 60Hz 3~	3PHASE	3482	2,51	3125	2,25	55		1430	1870	2353	2881	3448	20,2	265	13,0	F	800	750	POE 22	C/V	DWG14	SM18	**NJ6226ZX**
										45	1533	1930	2398	2934	3537	4207											

NOTE: performance curves are calculated from Ashrae actual curves.

R404A / R507

LBP 50Hz

	SERIES MODEL	DISPLACEMENT cm³	HP	VOLTAGE FREQUENCY	MOTOR TYPE	RATED POINT - ASHRAE -23,3 °C / 54,4 °C COOLING W	RATED POINT - ASHRAE -23,3 °C / 54,4 °C EFFICIENCY W/W	RATED POINT - EN12900 -35°C/40 °C COOLING W	RATED POINT - EN12900 -35°C/40 °C EFFICIENCY W/W	COOLING CAPACITY EN12900 CONDENSING TEMPERATURE °C	EVAPORATING TEMPERATURE °C NO SUBCOOLING W -40	-35	-30	-25	-20	-15	-10	WEIGHT kg	MAX HEIGHT mm	LRA A	COOLING TYPE	FAN AIR FLOW (m³/h)	OIL CHARGE cm³	OIL TYPE	EXP DEVICE	DRAWINGS EXTERNAL VIEW REF.	DRAWINGS WIRING DIAGRAM REF.	MODEL
EMT	EMT2117GK	4,50	1/4	220-240V 50Hz 1~	CSIR	244	1,35	141	1,09	55			127	166	211	264	326	7,8	166	7,7	S	-	180	POE 22	C/V	DWG01	SM05	EMT2117GK
										45	91	125	164	210	265	330	408											
	EMT2121GK	5,20	1/3	220-240V 50Hz 1~	CSIR	300	1,4	174	1,12	55			168	212	264	327	400	7,8	166	8,5	F	270	180	POE 22	C/V	DWG01	SM05	EMT2121GK
										45	120	159	204	258	322	398	487											
	EMT2125GK	5,96	1/3	220-240V 50Hz 1~	CSIR	351	1,4	204	1,15	55			190	242	303	375	458	7,8	166	9,8	F	520	180	POE 22	C/V	DWG01	SM05	EMT2125GK
										45	140	185	238	301	373	462	562											
	EMT2130GK	6,76	1/2	220-240V 50Hz 1~	CSIR	390	1,34	222	1,08	55			205	263	330	407	497	8	171	12,14	F	520	180	POE 22	C/V	DWG01	SM05	EMT2130GK
										45	150	200	257	326	406	500	605											
NEK	NEK2125GK	6,20	1/3	220-240V 50Hz 1~	CSIR	341	1,22	178	0,9	55			169	221	283	354	434	10,4	187	12,4	F	520	350	POE 22	C/V	DWG03	SM05	NEK2125GK
										45	120	160	213	278	354	439	534											
	NEK2130GK	7,40	1/2	220-240V 50Hz 1~	CSIR	399	1,32	210	0,99	55			203	267	341	426	522	10,9	200	16	F	520	350	POE 22	C/V	DWG03	SM05	NEK2130GK
										45	132	187	254	332	422	524	640											
	NEK2134GK	8,78	1/2	220-240V 50Hz 1~	CSIR	464	1,3	253	1,00	55			239	313	401	501	611	11	200	16,1	F	520	350	POE 22	C/V	DWG03	SM05	NEK2134GK
										45	170	227	302	394	501	621	753											
	NEK2134GK	8,78	1/2	100V 50/60Hz 1~	CSIR	448	1,19	235	0,86	55			233	305	390	486	595	11,6	206	34	F	520	350	POE 22	C/V	DWG04	SM03	NEK2134GK
										45	165	223	295	330	486	603	735											
	NEK2134GK	8,78	1/2	100V 50/60Hz 1~	CSR	452	1,28	237	0,93	55			236	309	394	491,2	600	11,6	206	34	F	520	350	POE 22	C/V	DWG04	SM03	NEK2134GK
										45	169	225	297	332	487	606,4	741											
	NEK2150GK	12,12	3/4	220-240V 50Hz 1~	CSIR	616	1,24	346	0,98	55			326	419	529	657	807	11,6	206	19,5	F	520	350	POE 22	C/V	DWG03	SM05	NEK2150GK
										45	235	313	408	522	657	814	995											
	NEK2150GK	12,12	1/2	100V 50/60Hz 1~	CSR	581	1,14	304	0,80	55			299	395	509	640,1	788	11,6	206	44	F	520	350	POE 22	C/V	DWG04	SM03	NEK2150GK
										45	212	286	381	429	634	791,3	969											
	NEK2168GK	14,30	3/4	220-240V 50Hz 1~	CSIR	688	1,13	360	0,95	55			358	468	596	743	909	11,6	206	24	F	520	350	POE 22	C/V	DWG03	SM05	NEK2168GK
										45	259	345	454	587	742	921	1123											
	NEK2168GK	14,30	3/4	220-240V 50Hz 1~	CSR	707	1,28	380	0,97	55			371	484	618	771,2	944	11,6	206	24	F	520	350	POE 22	C/V	DWG03	SM05	NEK2168GK
										45	263	353	466	605	767	954,7	1166											
NEU	NEU2140GK	8,78	1/2	220-240V 50Hz 1~	CSIR	490	1,33	275	1,13	55			260	339	432	536	654	10,6	200	13,5	F	520	350	POE 22	C/V	DWG03	SM05	NEU2140GK
										45	183	246	326	421	531	658	801											
	NEU2155GK	12,12	3/4	220-240V 50Hz 1~	CSIR	658	1,32	368	1,08	55			413	477	546	713	870	11,1	206	18	F	520	350	POE 22	C/V	DWG03	SM05	NEU2155GK
										45	246	328	432	557	705	875	1067											
	NEU2168GK	14,30	3/4	220-240V 50Hz 1~	CSIR	744	1,27	416	1,08	55			298	522	661	814	982	11,6	206	22	F	520	350	POE 22	C/V	DWG03	SM05	NEU2168GK
										45	271	372	496	642	810	1000	1213											
	NEU2168GJ	14,30	3/4	220-240V 50Hz 1 Ph.	CSR	790	1,49	437	1,21	55			411	537	684	852	1042	11,6	206	22	F	520	350	POE 22	C/V	DWG03	SM06	NEU2168GJ
										45	293	391	514	664	838	1038	1264											
	NEU2178GK	16,80	1	220-240V 50Hz 1 Ph.	CSR	931	1,42	501	1,14	55			468	605	765	947	1152	11,6	206	21	F	520	350	POE 22	C/V	DWG03	SM06	NEU2178GK
										45	334	447	586	753	947	1168	1416											

NOTE: performance curves are calculated from Ashrae actual curves.

R404A / R507

LBP 50Hz

	SERIES MODEL	DISPLACEMENT cm³	HP	VOLTAGE FREQUENCY	MOTOR TYPE	RATED POINT - ASHRAE -23,3 °C / 54,4 °C COOLING W	RATED POINT - ASHRAE -23,3 °C / 54,4 °C EFFICIENCY W/W	RATED POINT - EN12900 -35°C/40 °C COOLING W	RATED POINT - EN12900 -35°C/40 °C EFFICIENCY W/W	COOLING CAPACITY EN12900 CONDENSING TEMPERATURE °C	EVAPORATING TEMPERATURE °C NO SUBCOOLING W -40	-35	-30	-25	-20	-15	-10	WEIGHT kg	MAX HEIGHT mm	LRA A	COOLING TYPE	FAN AIR FLOW (m³/h)	OIL CHARGE cm³	OIL TYPE	EXP DEVICE	DRAWINGS EXTERNAL VIEW REF.	DRAWINGS WIRING DIAGRAM REF.	MODEL
NT	NT2168GK	14,5	3/4	200-240V 50Hz / 230V 60Hz 1~	CSIR	642	1,28	354	1,03	55			319	422	542	685	859	17	220	25	F	520	450	POE 22	C/V	DWG16	SM19	NT2168GK
										45	206	310	423	549	698	875	1089											
NT	NT2168GK	14,5	3/4	200-240V 50Hz / 230V 60Hz 1~	CSR	642	1,28	354	1,03	55			319	422	542	685	859	17	220	25	F	520	450	POE 22	C/V	DWG16	SM23	NT2168GK
										45	206	310	423	549	698	875	1089											
NT	NT2168GS	14,5	3/4	200V 50-60Hz 3~	3PHASE	652	1,32	341	1,03	55			312	418	546	696	869	18,3	250	28	F	520	650	POE 22	C/V	DWG17	SM27	NT2168GS
										45	214	300	410	544	704	890	1107											
NT	NT2178GK	17,4	3/4	220-240V 50Hz 1~	CSIR	782	1,3	416	0,98	55			378	502	647	812	997	17	220	25	F	520	450	POE 22	C/V	DWG16	SM19	NT2178GK
										45	273	373	502	659	844	1057	1297											
NT	NT2178GK	17,4	3/4	220-240V 50Hz 1~	CSR	802	1,42	420	0,91	55			385	513	663	835	1030	17	220	25	F	520	450	POE 22	C/V	DWG16	SM23	NT2178GK
										45	257	375	513	671	854	1062	1300											
NT	NT2178GK	17,4	3/4	200-240V 50Hz / 230V 60Hz 1~	CSIR	800	1,15	419	0,89	55			399	516	651	806	983	17	220	26	F	520	450	POE 22	C/V	DWG16	SM19	NT2178GK
										45	283	396	526	676	853	1056	1290											
NT	NT2178GK	17,4	3/4	200-240V 50Hz / 230V 60Hz 1~	CSR	854	1,47	447	1,14	55			399	516	651	806	983	17	220	26	F	520	450	POE 22	C/V	DWG16	SM23	NT2178GK
										45	283	396	526	676	853	1056	1290											
NT	NT2178GK	17,4	3/4	100V 50/60Hz 1~	CSR	812	1,3	425	0,98	55			392	520	674	854	1063	17	220	25	F	520	450	POE 22	C/V	DWG16	SM23	NT2178GK
										45	292	394	525	685	878	1105	1372											
NT	NT2180GK	20,4	1	220-240V 50Hz 1~	CSIR	935	1,25	490	0,95	55			461	601	767	958	1176	17,4	234	35	F	520	450	POE 22	C/V	DWG16	SM19	NT2180GK
										45	323	453	604	778	977	1203	1458											
NT	NT2180GK	20,4	1	220-240V 50Hz 1~	CSR	935	1,36	530	1,05	55			483	640	814	1007	1224	17,4	234	35	F	520	450	POE 22	C/V	DWG16	SM23	NT2180GK
										45	332	468	625	814	1034	1286	1573											
NT	NT2192GS	22,4	1	200V 50-60Hz 3~	3PHASE	1049	1,35	549	1,07	55			516	675	860	1072	1315	18,3	250	28	F	520	650	POE 22	C/V	DWG17	SM27	NT2192GS
										45	364	504	673	872	1106	1378	1690											
NT	NT2192GK	22,4	1	220-240V 50Hz 1~	CSIR	1053	1,3	551	1,03	55			518	675	860	1074	1321	17,5	234	35	F	520	450	POE 22	C/V	DWG16	SM19	NT2192GK
										45	373	506	669	865	1100	1375	1693											
NT	NT2192GK	22,4	1 1/4	220-240V 50Hz 1~	CSR	1089	1,47	568	1,06	55			522	681	867	1083	1330	17,5	234	35	F	520	450	POE 22	C/V	DWG16	SM23	NT2192GK
										45	367	505	672	869	1100	1366	1669											
NT	NT2210GK	26,2	1 1/4	220-240V 50Hz 1~	CSR	1306	1,40	685	1,06	55			640	839	1069	1331	1624	17,9	234	33	F	520	450	POE 22	C/V	DWG17	SM26	NT2210GK
										45	431	597	804	1052	1340	1670	2041											
NT	NT2212GS	27,8	1 1/4	200V 50-60Hz 3~	3PHASE	1317	1,33	690	1,04	55			649	847	1085	1361	1682	18,3	250	36	F	520	650	POE 22	C/V	DWG17	SM27	NT2212GS
										45	471	632	835	1082	1378	1727	2132											
NT	NT2212GK	27,8	1 1/4	220-240V 50Hz 1~	CSR	1373	1,37	719	1,07	55			688	888	1127	1405	1728	18,3	250	33	F	520	650	POE 22	C/V	DWG17	SM26	NT2212GK
										45	503	671	876	1125	1421	1770	2174											
NJ	NJ2192GK/J	26,1	1 1/4	220-240V 50Hz 1~	CSR	1126	1,32	585	0,97	55			530	722	938	1179	1444	20,4	265	26	F	800	750	POE 22	C/V	DWG14	SM16	NJ2192GK
										45	348	509	705	936	1203	1505	1842											
NJ	NJ2192GS	26,1	1 1/4	380-420V 50Hz / 440-480V 60Hz 3~	3PHASE	1128	1,23	591	0,85	55			529	718	939	1198	1497	19,7	265	15	F	800	750	POE 22	C/V	DWG14	SM18	NJ2192GS
										45	320	516	730	968	1235	1533	1868											
NJ	NJ2212GS	34,4	1 1/2	380-420V 50Hz / 440-480V 60Hz 3~	3PHASE	1481	1,3	775	0,87	55			668	935	1236	1577	1963	20,4	277	13,0	F	800	750	POE 22	C/V	DWG14	SM18	NJ2212GS
										45	361	615	901	1228	1605	2039	2538											
NJ	NJ2212GK/J	34,4	1 1/2	220-240V 50Hz 1~	CSR	1546	1,33	809	1,06	55			727	978	1262	1578	1923	21,5	277	36,0	F	800	750	POE 22	C/V	DWG14	SM16	NJ2212GK
										45	472	694	961	1276	1637	2041	2487											

NOTE: performance curves are calculated from Ashrae actual curves.

R404A / R507

MBP 50Hz

	SERIES MODEL	DISPLACEMENT cm³	HP	VOLTAGE FREQUENCY	MOTOR TYPE	RATED POINT - ASHRAE 7,2 °C / 54,4 °C COOLING W	RATED POINT - ASHRAE 7,2 °C / 54,4 °C EFFICIENCY W/W	RATED POINT - EN12900 -10°C/45 °C COOLING W	RATED POINT - EN12900 -10°C/45 °C EFFICIENCY W/W	COOLING CAPACITY EN12900 CONDENSING TEMPERATURE °C	EVAPORATING TEMPERATURE °C NO SUBCOOLING W -20	-15	-10	-5	0	5	10	WEIGHT kg	MAX HEIGHT mm	LRA A	COOLING TYPE	FAN AIR FLOW (m³/h)	OIL CHARGE cm³	OIL TYPE	EXP DEVICE	DRAWINGS EXTERNAL VIEW REF.	DRAWINGS WIRING DIAGRAM REF.	MODEL
EMT	EMT6144GK	3,97	1/4	220-240V 50Hz 1~	CSIR	679	2,39	378	1,90	55			303	370	448	535	634	7,8	166	7,7	F	270	180	POE 22	C/V	DWG01	SM05	EMT6144GK
										45	246	307	377	458	551	656	773											
	EMT6152GK	4,50	1/4	220-240V 50Hz 1~	CSIR	758	2,3	424	1,85	55			339	413	497	593	699	7,8	166	8,5	F	520	180	POE 22	C/V	DWG01	SM05	EMT6152GK
										45	275	344	422	511	614	731	861											
	EMT6165GK	5,20	1/3	220-240V 50Hz 1~	CSIR	877	2,23	484	1,76	55			384	471	570	682	808	7,8	166	10,4	F	520	180	POE 22	C/V	DWG01	SM05	EMT6165GK
										45	315	392	482	586	706	840	989											
NEK	NEK6165GK	6,20	1/3	220-240V 50Hz 1~	CSIR	966	2,05	542	1,64	55			443	533	639	759	895	10,4	187	12,4	F	520	350	POE 22	C/V	DWG03	SM05	NEK6165GK
										45	388	454	542	650	781	931	1103											
	NEK6181GK	7,28	1/3	220-240V 50Hz 1~	CSIR	1089	2,12	599	1,66	55			483	587	711	853	1013	10,4	187	12,0	F	520	350	POE 22	C/V	DWG03	SM05	NEK6181GK
										45	405	491	599	730	882	1057	1252											
	NEK6210GK	8,78	1/2	220-240V 50Hz 1~	CSIR	1304	2,07	724	1,68	55			571	698	849	1021	1216	11,0	200	16,1	F	520	350	POE 22	C/V	DWG03	SM05	NEK6210GK
										45	500	598	724	877	1058	1265	1499											
	NEK6210GK	8,78	1/2	100V 50/60 HZ 1~	CSIR	1340	1,98	733	1,46	55			586	723	879	1054	1247	11,0	206	38,0	F	520	350	POE 22	C/V	DWG03	SM05	NEK6210GK
										45	468	589	733	900	1091	1305	1540											
	NEK6213GK	12,12	1/2	220-240V 50Hz 1~	CSIR	1761	1,85	972	1,46	55			788	958	1150	1366	1603	11,6	206	19,3	F	520	350	POE 22	C/V	DWG03	SM05	NEK6213GK
										45	666	804	972	1171	1403	1666	1963											
	NEK6217GK	14,30	3/4	220-240V 50Hz 1~	CSR	2075	2,05	1166	1,69	55			955	1157	1386	1638	1916	11,6	206	21,5	F	520	350	POE 22	C/V	DWG03	SM06	NEK6217GK
										45	777	954	1166	1411	1690	2003	2347											
NEU	NEU6212GK	8,78	1/2	220-240V 50Hz 1~	CSIR	1438	2,23	792	1,74	55			643	788	952	1134	1336	11,0	200	19	F	520	350	POE 22	C/V	DWG03	SM05	NEU6212GK
										45	505	638	793	970	1169	1390	1632											
	NEU6215GK	12,12	3/4	220-240V 50Hz 1~	CSIR	1862	1,92	1065	1,71	55			884	1072	1281	1510	1762	11,5	206	22	F	520	350	POE 22	C/V	DWG03	SM05	NEU6215GK
										45	717	889	1087	1313	1564	1843	2148											
	NEU6215GK	12,12	3/4	220-240V 50Hz 1~	CSR	1929	2,23	1089	1,89	55			904	1098	1318	1566	1840	11,5	206	22	F	520	350	POE 22	C/V	DWG03	SM06	NEU6215GK
										45	728	903	1108	1342	1605	1898	2221											
NT/NTU	NT6217GK	12,5	1/2	200-240V 50Hz / 230V 60Hz 1~	CSIR	1819	2,26	960	1,76	55			732	914	1122	1357	1618	17,0	220	25	F	520	450	POE 22	C/V	DWG16	SM19	NT6217GK
										45	602	764	960	1190	1453	1746	2068											
	NT6217GK	12,5	1/2	200-240V 50Hz / 230V 60Hz 1~	CSR	1820	2,26	891	1,73	55			692	878	1095	1339	1381	16,9	220	25	F	520	450	POE 22	C/V	DWG16	SM23	NT6217GK
										45	535	691	891	1130	1406	1713	2048											
	NT6220GK	14,5	3/4	200-240V 50Hz / 230V 60Hz 1~	CSIR	2119	2,21	1080	1,67	55			853	1061	1307	1589	1907	17,0	220	29,5	F	520	450	POE 22	C/V	DWG16	SM19	NT6220GK
										45	678	858	1080	1342	1645	1985	2362											
	NT6220GK	14,5	3/4	200-240V 50Hz / 230V 60Hz 1~	CSR	2206	2,37	1096	1,75	55			861	1067	1305	1574	1876	17,2	220	29,5	F	520	450	POE 22	C/V	DWG16	SM23	NT6220GK
										45	680	870	1096	1358	1657	1993	2365											
	NT6222GK	17,4	3/4	200-240V 50Hz / 230V 60Hz 1~	CSIR	2489	2,09	1322	1,71	55			1025	1275	1557	1869	2210	17,0	220	37,0	F	520	450	POE 22	C/V	DWG16	SM19	NT6222GK
										45	835	1057	1322	1631	1980	2369	2797											
	NT6222GK	17,4	3/4	200-240V 50Hz / 230V 60Hz 1~	CSR	2488	2,26	1307	1,70	55			1040	1294	1583	1903	2247	17,0	220	37,0	F	520	450	POE 22	C/V	DWG16	SM23	NT6222GK
										45	810	1032	1307	1629	1992	2388	2813											
	NT6222GK	17,4	3/4	220-240V 50Hz 1~	CSIR	2482	2,02	1287	1,50	55			995	1233	1520	1850	2222	17,2	220	30,0	F	520	450	POE 22	C/V	DWG16	SM19	NT6222GK
										45	839	1034	1287	1597	1960	2371	2830											
	NT6222GK	17,4	3/4	220-240V 50Hz 1~	CSR	2482	2,23	1332	1,63	55			1038	1276	1551	1866	2226	17,2	220	30,0	F	520	450	POE 22	C/V	DWG16	SM23	NT6222GK
										45	846	1071	1332	1635	1981	2372	2811											
	NT6224GK	20,4	1	220-240V 50HZ 1~	CSIR	3023	2,23	1573	1,59	55			1244	1540	1879	2258	2678	17,2	220	29,0	F	520	450	POE 22	C/V	DWG17	SM22	NT6224GK
										45	996	1261	1573	1933	2339	2787	3278											
	NT6224GK	20,4	1	220-240V 50HZ 1~	CSR	3023	2,38	1573	1,69	55			1244	1540	1879	2258	2678	17,2	220	29,0	F	520	450	POE 22	C/V	DWG17	SM21	NT6224GK
										45	996	1261	1573	1933	2339	2787	3278											
	NT6226GK	22,4	1	220-240V 50Hz 1~	CSIR	3221	2,09	1717	1,65	55			1369	1674	2030	2434	2887	17,5	234	38,0	F	520	450	POE 22	C/V	DWG17	SM22	NT6226GK
										45	1105	1383	1717	2108	2557	3057	3614											
	NT6226GK	22,4	1	220-240V 50Hz 1~	CSR	3355	2,44	1752	1,79	55			1412	1724	2091	2518	3014	17,5	234	38,0	F	520	450	POE 22	C/V	DWG17	SM21	NT6226GK
										45	1137	1420	1753	2143	2597	3122	3724											
	NTU6232GKV	20,4	1	220-240V 50HZ 1~	CSR	3297	2,86	1757	1,99	55			1405	1704	2046	2445	2914	18,4	253	37,5	F	520	650	POE 22	C/V	DWG19	SM26	NTU6232GKV
										45	1148	1433	1754	2126	2561	3075	3681											
	NTU6234GKV	23,7	1 1/4	220-240V 50HZ 1~	CSR	3851	2,82	2091	2,02	55			1655	2022	2425	2847	3269	18,4	253	37,5	F	520	650	POE 22	C/V	DWG19	SM26	NTU6234GKV
										45	1389	1702	2089	2533	3014	3517	4023											
	NTU6238GKV	26,2	1 1/2	220-240V 50HZ 1~	CSR	4212	2,74	2288	2,02	55			1826	2233	2691	3186	3706	18,4	253	37,5	F	520	650	POE 22	C/V	DWG19	SM26	NTU6238GKV
										45	1523	1854	2282	2794	3376	4016	4700											
	NTU6240GKV	27,8	1 1/2	220-240V 50HZ 1~	CSR	4443	2,68	2426	2,01	55			1940	2358	2837	3372	3959	18,4	2	37,5	F	520	650	POE 22	C/V	DWG19	SM26	NTU6240GKV
										45	1622	1978	2425	2957	3570	4258	5017											

NOTE: performance curves are calculated from Ashrae actual curves.

R404A / R507

M/HBP 50 Hz

SERIES MODEL	DISPLACEMENT cm³	HP	VOLTAGE FREQUENCY	MOTOR TYPE	RATED POINT - ASHRAE 7,2 °C / 54,4 °C COOLING W	RATED POINT - ASHRAE 7,2 °C / 54,4 °C EFFICIENCY W/W	RATED POINT - EN12900 -10°C/45 °C COOLING W	RATED POINT - EN12900 -10°C/45 °C EFFICIENCY W/W	COOLING CAPACITY EN12900 CONDENSING TEMPERATURE °C	EVAPORATING TEMPERATURE °C NO SUBCOOLING W -20	-15	-10	-5	-0	5	10	WEIGHT kg	MAX HEIGHT mm	LRA A	COOLING TYPE	FAN AIR FLOW (m³/h)	OIL CHARGE cm³	OIL TYPE	EXP DEVICE	DRAWINGS EXTERNAL VIEW REF.	DRAWINGS WIRING DIAGRAM REF.	MODEL
NJ9226GK	21,7	1	230V 50Hz 1~	CSR	3241	2,34	1648	1,70	55			1255	1581	1944	2340	2766	20,7	265	27,5	F	800	750	POE 22	C/V	DWG14	SM17	NJ9226GK
									45	982	1285	1648	2066	2536	3055	3618											
NJ9226GS	21,7	1	380-420V 50Hz / 440-480V 60Hz 3~	3PHASE	3248	2,5	1667	1,79	55			1278	1609	1980	2389	2838	19,0	265	10,0	F	800	750	POE 22	C/V	DWG14	SM18	NJ9226GS
									45	989	1301	1667	2086	2560	3087	3668											
NJ9232GK	26,1	1 1/2	220-240V 50Hz 1~	CSR	4030	2,56	1911	1,63	55			1414	1817	2271	2771	3315	21,6	277	43,0	F	800	750	POE 22	C/V	DWG14	SM17	NJ9232GK
									45	1093	1470	1911	2413	2973	3588	4255											
NJ9232GS	26,1	1 1/2	380-420V 50Hz / 440-480V 60Hz 3~	3PHASE	4030	2,5	1972	1,80	55			1513	1911	2357	2853	3396	20,4	277	13,0	F	800	750	POE 22	C/V	DWG14	SM18	NJ9232GS
									45	1166	1535	1972	2476	3047	3684	4388											
NJ9238GK	32,7	1 1/2	230V 50Hz 1~	CSR	4620	2,09	2424	1,59	55			1895	2323	2804	3347	3958	22,1	277	43,0	F	800	750	POE 22	C/V	DWG14	SM17	NJ9238GK
									45	1507	1939	2424	2970	3583	4272	5044											
NJ9238GS	32,7	1 1/2	380-420V 50Hz / 440-480V 60Hz 3~	3PHASE	4839	2,55	2506	1,90	55			1883	2345	2863	3435	4062	21,7	277	22,0	F	800	750	POE 22	C/V	DWG14	SM18	NJ9238GS
									45	1514	1979	2506	3091	3735	4441	5207											

NOTE: performance curves are calculated from Ashrae actual curves.

R404A / R507

LBP 60Hz

SERIES MODEL	DISPLACEMENT cm³	HP	VOLTAGE FREQUENCY	MOTOR TYPE	RATED POINT - ASHRAE -23,3 °C / 54,4 °C COOLING W	RATED POINT - ASHRAE -23,3 °C / 54,4 °C EFFICIENCY W/W	RATED POINT - ARI 540 -23,3 °C/48,9 °C COOLING W	RATED POINT - ARI 540 -23,3 °C/48,9 °C EFFICIENCY W/W	COOLING CAPACITY ARI 540 CONDENSING TEMPERATURE °C	EVAPORATING TEMPERATURE °C NO SUBCOOLING W -40	-35	-30	-25	-20	-15	-10	WEIGHT kg	MAX HEIGHT mm	LRA A	COOLING TYPE	FAN AIR FLOW (m³/h)	OIL CHARGE cm³	OIL TYPE	EXP DEVICE	DRAWINGS EXTERNAL VIEW REF.	DRAWINGS WIRING DIAGRAM REF.	MODEL
NEK2117GK	4,52	1/4	115V 60Hz 1~	CSIR	287	1,19	211	0,89	55			119	154	195	243	296	10,4	187	28,5	F	520	350	POE 22	C/V	DWG04	SM04	NEK2117GK
									45	92	117	151	197	251	312	379											
NEK2121GK	5,45	1/3	115V 60Hz 1~	CSIR	355	1,24	261	0,92	55			149	191	240	296	359	10,4	187	26,5	F	520	350	POE 22	C/V	DWG04	SM04	NEK2121GK
									45	118	151	193	245	306	376	454											
NEK2125GK	6,20	1/3	115V 60Hz 1~	CSIR	427	1,32	314	0,99	55			183	231	287	350	420	10,4	187	26,5	F	520	350	POE 22	C/V	DWG04	SM04	NEK2125GK
									45	141	179	228	288	359	440	530											
NEK2134GK	8,78	1/2	100V 50/60Hz 1~	CSIR	529	1,24	387	0,93	55			218	284	357	448	544	11,5	206	34	F	520	350	POE 22	C/V	DWG04	SM04	NEK2134GK
									45	161	224	292	382	482	589	706											
NEK2134GK	8,78	1/2	100V 50/60Hz 1~	CSR	533	1,33	391	1,00	55			219	286	362	447	539	11,5	206	34	F	520	350	POE 22	C/V	DWG04	SM04	NEK2134GK
									45	171	222	291	369	469	582	697											
NEK2134GK	8,78	1/2	208-230V 60Hz 1~	CSIR	544	1,30	400	0,97	55			223	290	368	457	554	11,6	206	20,0	F	520	350	POE 22	C/V	DWG04	SM04	NEK2134GK
									45	164	220	290	375	472	583	707											
NEK2134GK	8,78	1/2	115V 60Hz 1~	CSIR	571	1,32	420	0,99	55			236	307	387	476	573	11,0	200	37,5	F	520	350	POE 22	C/V	DWG04	SM04	NEK2134GK
									45	173	231	303	387	485	594	714											
NEK2150GK	12,12	1/2	208-230V 60Hz 1~	CSIR	692	1,18	509	0,89	55			288	371	468	580	706	11,6	206	20,0	F	520	350	POE 22	C/V	DWG04	SM04	NEK2150GK
									45	235	297	379	481	603	744	902											
NEK2150GK	12,12	1/2	100V 50/60Hz 1~	CSR	696	1,31	512	0,98	55			285	372	472	586	711	11,6	206	20,0	F	520	350	POE 22	C/V	DWG04	SM04	NEK2150GK
									45	213	283	374	482	607	747	901											
NEK2150GK	12,12	1/2	115V 60Hz 1~	CSIR	717	1,22	527	0,92	55			298	385	486	599	725	11,6	206	41,5	F	520	350	POE 22	C/V	DWG04	SM04	NEK2150GK
									45	231	300	389	496	622	766	927											
NEK2150GK	12,12	1/2	115V 60Hz 1~	CSR	731	1,34	536	1,01	55			325	423	538	669	818	11,6	206	41,5	F	520	350	POE 22	C/V	DWG04	SM06	NEK2150GK
									45	250	324	421	541	683	848	1036											
NEK2168GK	14,30	3/4	115V 60Hz 1~	CSR	833	1,34	577	0,95	55			334	443	569	714	875	11,6	206	46,0	F	520	350	POE 22	C/V	DWG04	SM06	NEK2168GK
									45	244	336	449	585	741	920	1119											
NEK2168GK	14,30	3/4	208-230V 60Hz 1~	CSR	816	1,29	584	0,94	55			343	456	589	740	911	11,6	206	27,0	F	520	350	POE 22	C/V	DWG04	SM06	NEK2168GK
									45	244	333	448	588	753	943	1159											

NOTE: performance curves are calculated from Ashrae actual curves.

R404A / R507

LBP 60Hz

SERIES MODEL	DISPLACEMENT cm³	HP	VOLTAGE FREQUENCY	MOTOR TYPE	RATED POINT - ASHRAE -23,3 ºC / 54,4 ºC COOLING W	RATED POINT - ASHRAE -23,3 ºC / 54,4 ºC EFFICIENCY W/W	RATED POINT ARI 540 -23,3ºC/48,9 ºC COOLING W	RATED POINT ARI 540 -23,3ºC/48,9 ºC EFFICIENCY W/W	COOLING CAPACITY ARI 540 CONDENSING TEMPERATURE ºC	EVAPORATING TEMPERATURE ºC NO SUBCOOLING W -40	-35	-30	-25	-20	-15	-10	WEIGHT kg	MAX HEIGHT mm	LRA A	COOLING TYPE	FAN AIR FLOW (m³/h)	OIL CHARGE cm³	OIL TYPE	EXP DEVICE	DRAWINGS EXTERNAL VIEW REF.	DRAWINGS WIRING DIAGRAM REF.	MODEL
NT																											
NT2168GK(V)	14,5	3/4	115V 60Hz 1~	CSIR	770	1,21	566	0,90	55			307	410	528	660	805	17,0	220	54,5	F	520	450	POE 22	C/V	DWG17	SM22	NT2168GK(V)
									45	205	302	421	561	719	895	1085											
NT2168GS	14,5	3/4	200V 50/60Hz 3~	3PHASE	786	1,37	578	0,97	55			290	411	557	710	867	18,2	250	28,5	F	520	650	POE 22	C/V	DWG17	SM27	NT2168GS
									45	145	259	397	542	714	914	1139											
NT2168GK(V)	14,5	3/4	208-230V 60Hz 1~	CSIR	789	1,27	580	0,94	55			300	420	545	685	838	16,7	220	29,0	F	520	450	POE 22	C/V	DWG16	SM20	NT2168GK(V)
									45	215	309	425	563	722	901	1100											
NT2168GK(V)	14,5	3/4	115V 60Hz 1~	CSR	830	1,41	610	1,03	55			331	455	599	765	954	17,0	220	54,5	F	520	450	POE 22	C/V	DWG17	SM21	NT2168GK(V)
									45	231	340	470	622	799	1003	1234											
NT2168GK(V)	14,5	3/4	208-230V 60Hz 1~	CSR	838	1,42	616	1,03	55			305	426	572	746	945	16,7	220	29,0	F	520	450	POE 22	C/V	DWG16	SM23	NT2168GK(V)
									45	219	323	455	614	801	1015	1257											
NT2178GK(V)	17,4	1	100V 50/60Hz 1~	CSR	1002	1,38	583	0,82	55			378	510	666	848	1055	17,1	220	66,0	F	520	450	POE 22	C/V	DWG17	SM21	NT2178GK(V)
									45	280	393	535	703	899	1121	1366											
NT2178GK(V)	17,4	1	115V 60Hz 1~	CSIR	1002	1,21	734	0,92	55			403	535	686	853	1034	17,0	220	66,0	F	520	450	POE 22	C/V	DWG17	SM22	NT2178GK(V)
									45	285	401	546	719	916	1135	1376											
NT2178GK(V)	17,4	1	208-230V 60Hz 1~	CSIR	1021	1,28	751	0,97	55			410	546	704	881	1077	17,0	220	35,5	F	520	450	POE 22	C/V	DWG16	SM23	NT2178GK(V)
									45	282	404	553	727	927	1151	1399											
NT2178GK(V)	17,4	1	115V 60Hz 1~	CSR	1050	1,41	772	1,05	55			422	562	722	901	1098	17,0	220	66,0	F	520	450	POE 22	C/V	DWG17	SM21	NT2178GK(V)
									45	288	415	566	744	945	1169	1415											
NT2178GK(V)	17,4	1	208-230V 60Hz 1~	CSR	1070	1,35	790	1,03	55			418	563	735	935	1166	17,0	220	35,5	F	520	450	POE 22	C/V	DWG16	SM20	NT2178GK(V)
									45	285	415	572	758	975	1225	1509											
NT2180GK(V)	20,4	1	115V 60Hz 1~	CSIR	1120	1,18	823	0,88	55			410	530	720	920	1140	17,5	220	66,0	F	520	450	POE 22	C/V	DWG17	SM22	NT2180GK(V)
									45	280	408	760	738	955	1192	1462											
NT2180GK(V)	20,4	1	208-230V 60Hz 1~	CSR	1161	1,32	854	0,99	55			456	610	782	973	1184	17,5	234	40,0	F	520	450	POE 22	C/V	DWG16	SM23	NT2180GK(V)
									45	296	440	610	809	1038	1298	1590											
NT2180GK(V)	20,4	1	115V 60Hz 1~	CSR	1173	1,38	879	1,02	55			418	563	735	935	1166	17,5	220	66,0	F	520	450	POE 22	C/V	DWG17	SM21	NT2180GK(V)
									45	285	415	572	758	975	1225	1509											
NT2192GS	22,4	1	200V 50/60Hz 3~	3PHASE	1220	1,29	897	0,99	55			492	655	844	1060	1297	18,0	250	28,5	F	520	650	POE 22	C/V	DWG17	SM27	NT2192GS
									45	347	487	660	867	1104	1372	1668											
NT2192GK(V)	22,4	1 1/4	115V 60Hz 1~	CSIR	1230	1,19	904	0,97	55			515	663	822	993	1173	17,5	234	56,0	F	520	450	POE 22	C/V	DWG17	SM22	NT2192GK(V)
									45	366	498	667	873	1113	1387	1693											
NT2192GK(V)	22,4	1	208-230V 60Hz 1~	CSR	1262	1,43	928	1,05	55			507	667	850	1052	1270	18,0	234	40,0	F	520	450	POE 22	C/V	DWG16	SM23	NT2192GK(V)
									45	363	496	665	868	1103	1371	1666											
NT2192GK(V)	22,4	1 1/4	115V 60Hz 1~	CSR	1283	1,41	943	1,02	55			541	710	917	1160	1438	17,5	234	56,0	F	520	450	POE 22	C/V	DWG17	SM21	NT2192GK(V)
									45	385	535	727	960	1233	1543	1890											
NT2212GS	27,8	1 1/4	200V 50/60Hz 3~	3PHASE	1571	1,31	1155	0,98	55			622	822	1049	1304	1583	18,0	250	36,0	F	520	650	POE 22	C/V	DWG17	SM27	NT2212GS
									45	411	607	833	1090	1375	1687	2025											
NT2212GKV	27,8	1 1/2	115V 60Hz 1~	CSR	1609	1,37	1183	1,00	55			692	922	1179	1471	1805	18,3	250	93,0	F	520	650	POE 22	C/V	DWG17	SM26	NT2212GKV
									45	462	681	925	1202	1518	1881	2299											
NT2212GK(V)	27,8	1 1/2	208-230V 60Hz 1~	CSR	1673	1,42	1230	1,03	55			723	959	1233	1545	1894	18,3	250	45,0	F	520	650	POE 22	C/V	DWG17	SM26	NT2212GK(V)
									45	482	693	949	1249	1592	1980	2412											

NOTE: performance curves are calculated from Ashrae actual curves.

R404A / R507

LBP 60Hz

SERIES MODEL	DISPLACEMENT cm³	HP	VOLTAGE FREQUENCY	MOTOR TYPE	RATED POINT - ASHRAE -23,3 °C / 54,4 °C COOLING W	RATED POINT - ASHRAE -23,3 °C / 54,4 °C EFFICIENCY W/W	RATED POINT - ARI 540 -23,3°C/48,9 °C COOLING W	RATED POINT - ARI 540 -23,3°C/48,9 °C EFFICIENCY W/W	COOLING CAPACITY ARI 540 CONDENSING TEMPERATURE °C	EVAPORATING TEMPERATURE °C NO SUBCOOLING W -40	-35	-30	-25	-20	-15	-10	WEIGHT kg	MAX HEIGHT mm	LRA A	COOLING TYPE	FAN AIR FLOW (m³/h)	OIL CHARGE cm³	OIL TYPE	EXP DEVICE	DRAWINGS EXTERNAL VIEW REF.	DRAWINGS WIRING DIAGRAM REF.	MODEL
NJ																											
NJ2192GK	26,1	1 1/4	115V 60Hz 1~	CSR	1316	1,30	968	0,96	55			444	600	783	993	1234	21,7	277	98,0	F	800	750	POE 22	C/V	DWG14	SM16	NJ2192GK
									45	270	440	624	827	1052	1303	1582											
NJ2192GK	26,1	1 1/4	208-230V 60Hz 1~	CSR	1319	1,30	970	0,96	55			405	589	791	1010	1245	21,8	277	40,0	F	800	750	POE 22	C/V	DWG14	SM16	NJ2192GK
									45	203	390	594	814	1052	1309	1586											
NJ2192GS	26,1	1 1/4	380-420V 50Hz / 440-480V 60Hz 3~	3PHASE	1319	1,24	970	0,90	55			444	601	782	993	1232	19,7	265	13,0	F	800	750	POE 22	C/V	DWG14	SM18	NJ2192GS
									45	270	440	624	827	1052	1303	1582											
NJ2212GK	34,4	1 1/2	115V 60Hz 1~	CSR	1595	1,22	1173	0,90	55			594	834	1097	1386	1699	21,5	277	86,5	F	800	750	POE 22	C/V	DWG14	SM16	NJ2212GK
									45	359	569	819	1109	1441	1819	2241											
NJ2212GK	34,4	1 1/2	208-230V 60Hz 1~	CSR	1609	1,25	1183	0,91	55			613	857	1125	1414	1725	21,4	277	54,0	F	800	750	POE 22	C/V	DWG14	SM16	NJ2212GJ
									45	418	605	845	1138	1483	1877	2317											
NJ2212GS	34,4	1 1/2	380-420V 50Hz / 440-480V 60Hz 3~	3PHASE	1732	1,30	1273	0,96	55			561	783	1030	1306	1616	20,4	277	13,0	F	800	750	POE 22	C/V	DWG14	SM18	NJ2212GS
									45	303	524	771	1050	1368	1733	2149											

NOTE: performance curves are calculated from Ashrae actual curves.

R404A / R507

MBP 60Hz

SERIES MODEL	DISPLACEMENT cm³	HP	VOLTAGE FREQUENCY	MOTOR TYPE	RATED POINT - ASHRAE 7,2 °C / 54,4 °C COOLING W	RATED POINT - ASHRAE 7,2 °C / 54,4 °C EFFICIENCY W/W	RATED POINT - ARI 540 -6,7°C/48,9 °C COOLING W	RATED POINT - ARI 540 -6,7°C/48,9 °C EFFICIENCY W/W	COOLING CAPACITY ARI 540 CONDENSING TEMPERATURE °C	EVAPORATING TEMPERATURE °C NO SUBCOOLING W -20	-15	-10	-5	0	5	10	WEIGHT kg	MAX HEIGHT mm	LRA A	COOLING TYPE	FAN AIR FLOW (m³/h)	OIL CHARGE cm³	OIL TYPE	EXP DEVICE	DRAWINGS EXTERNAL VIEW REF.	DRAWINGS WIRING DIAGRAM REF.	MODEL
NEK																											
NEK6144GK	4,52	1/4	208-230V 60Hz 1~	CSIR	800	2,06	592	2,00	55			316	384	464	555	661	10,4	187,0	26,5	F	520	350	POE 22	C/V	DWG04	SM04	NEK6144GK
									45	250	316	391	476	573	683	807											
NEK6144GK	4,52	1/4	115V 60Hz 1~	CSIR	842	2,14	400	1,28	55			291	358	435	519	613	10,0	187,0	26,0	F	520	350	POE 22	C/V	DWG04	SM04	NEK6144GK
									45	238	303	379	467	567	679	802											
NEK6152GK	5,45	1/3	115V 60Hz 1~	CSIR	1018	2,09	481	1,22	55			362	441	530	630	741	10,2	187,0	26,0	F	520	350	POE 22	C/V	DWG04	SM04	NEK6152GK
									45	302	375	462	563	678	808	951											
NEK6165GK	6,20	1/3	115V 60Hz 1~	CSIR	1150	1,97	850	1,91	55			463	558	667	790	928	10,4	187,0	26,5	F	520	350	POE 22	C/V	DWG04	SM04	NEK6165GK
									45	380	458	555	671	806	958	1130											
NEK6181GK	7,28	1/3	115V 60Hz 1~	CSIR	1247	2,01	922	1,97	55			511	611	726	856	1006	10,4	187,0	26,5	F	520	350	POE 22	C/V	DWG04	SM04	NEK6181GK
									45	418	504	611	738	888	1062	1265											
NEK6181GK	7,28	1/3	115V 60Hz 1~	CSR	1321	2,33	977	2,24	55			509	624	756	902	1060	10,4	187,0	26,5	F	520	350	POE 22	C/V	DWG04	SM06	NEK6181GK
									45	419	513	633	774	933	1106	1292											
NEK6181GK	7,28	1/3	208-230V 60Hz 1~	CSIR	1290	2,07	954	2,04	55			506	612	740	886	1048	10,4	187,0	17,5	F	520	350	POE 22	C/V	DWG04	SM04	NEK6181GK
									45	432	508	616	752	913	1095	1295											
NEK6210GK	8,78	1/2	100V 60Hz 1~	CSIR	1583	2,07	1170	2,03	55			618	753	905	1074	1256	11,0	206,0	38,0	F	520	350	POE 22	C/V	DWG04	SM06	NEK6210GK
									45	499	623	770	939	1130	1343	1573											
NEK6210GK	8,78	1/2	115V 60Hz 1~	CSIR	1569	2,07	1160	2,04	55			621	749	901	1075	1272	11,0	200,0	38,0	F	520	350	POE 22	C/V	DWG04	SM04	NEK6210GK
									45	511	620	756	918	1105	1317	1555											
NEK6210GK	8,78	1/2	208-230V 60Hz 1~	CSIR	1540	2,10	1139	2,05	55			597	728	878	1048	1239	11,5	206,0	23,0	F	520	350	POE 22	C/V	DWG04	SM04	NEK6210GK
									45	490	606	745	906	1089	1292	1520											
NEK6210GK	8,78	1/2	115V 60Hz 1~	CSR	1612	2,30	1192	2,23	55			615	757	920	1104	1310	11,0	200,0	38,0	F	520	350	POE 22	C/V	DWG04	SM06	NEK6210GK
									45	493	618	766	937	1131	1347	1587											
NEK6213GK	12,12	1/2	115V 60Hz 1~	CSIR	1952	1,70	1444	1,69	55			799	965	1148	1348	1568	11,6	206,0	51,0	F	520	350	POE 22	C/V	DWG04	SM04	NEK6213GK
									45	634	786	963	1166	1393	1421	1921											
NEK6213GK	12,12	1/2	115V 60Hz 1~	CSR	2066	1,96	1528	1,92	55			819	994	1196	1221	1671	11,6	206,0	51,0	F	520	350	POE 22	C/V	DWG04	SM06	NEK6213GK
									45	647	804	990	1204	1445	1713	2008											
NEK6213GK	12,12	1/2	208-230V 60Hz 1~	CSIR	2035	1,84	1505	1,86	55			815	987	1180	1390	1621	11,9	206,0	30,0	F	520	350	POE 22	C/V	DWG04	SM04	NEK6213GK
									45	654	813	998	1207	1438	1693	1971											

NOTE: performance curves are calculated from Ashrae actual curves.

R404A / R507

MBP 60Hz

NT/NTU

SERIES MODEL	DISPLACEMENT cm³	HP	VOLTAGE FREQUENCY	MOTOR TYPE	RATED POINT - ASHRAE 7,2 °C / 54,4 °C COOLING W	RATED POINT - ASHRAE 7,2 °C / 54,4 °C EFFICIENCY W/W	RATED POINT - ARI 540 -6,7°C/48,9 °C COOLING W	RATED POINT - ARI 540 -6,7°C/48,9 °C EFFICIENCY W/W	COOLING CAPACITY ARI 540 CONDENSING TEMPERATURE °C	EVAPORATING TEMPERATURE °C NO SUBCOOLING W -20	-15	-10	-5	0	5	10	WEIGHT kg	MAX HEIGHT mm	LRA A	COOLING TYPE	FAN AIR FLOW (m³/h)	OIL CHARGE cm³	OIL TYPE	EXP DEVICE	DRAWINGS EXTERNAL VIEW REF.	DRAWINGS WIRING DIAGRAM REF.	MODEL
NT6217GK(V)	12,6	3/4	208-230V 60Hz 1~	CSIR	2148	2,13	1070	1,25	55			791	965	1161	1378	1616	17,0	220,0	27,0	F	520	450	POE 22	C/V	DWG16	SM20	NT6217GK(V)
									45	655	819	1015	1244	1505	1799	2126											
NT6217GK(V)	12,6	3/4	208-230V 60Hz 1~	CSR	2238	2,60	1115	1,53	55			846	1041	1260	1503	1769	16,7	220,0	27,0	F	520	450	POE 22	C/V	DWG16	SM23	NT6217GK(V)
									45	677	851	1060	1304	1582	1896	2244											
NT6217GK(V)	12,6	3/4	115V 60Hz 1~	CSIR	2163	2,20	1030	1,26	55			773	949	1153	1384	1641	17,0	220,0	50,0	F	520	450	POE 22	C/V	DWG16	SM20	NT6217GK(V)
									45	726	819	974	1192	1471	1813	2216											
NT6217GK(V)	12,6	3/4	115V 60Hz 1~	CSR	2251	2,68	1072	1,54	55			774	992	1256	1567	1924	16,7	220,0	50,0	F	520	450	POE 22	C/V	DWG16	SM23	NT6217GK(V)
									45	656	811	1017	1273	1581	1938	2347											
NT6220GKV	14,5	3/4	115V 60Hz 1~	CSIR	2480	2,14	1240	1,39	55			943	1170	1423	1698	1997	17,0	220,0	54,5	F	520	450	POE 22	C/V	DWG17	SM22	NT6220GKV
									45	739	943	1187	1468	1782	2128	2505											
NT6220GKV	14,5	3/4	208-230V 60Hz 1~	CSIR	2423	2,00	1247	1,38	55			955	1165	1400	1663	1957	16,9	220,0	26,5	F	520	450	POE 22	C/V	DWG16	SM20	NT6220GKV
									45	769	962	1187	1447	1742	2075	2449											
NT6220GKV	14,5	3/4	115V 60Hz 1~	CSR	2490	2,34	1250	1,52	55			918	1138	1383	1653	1949	16,7	220,0	54,5	F	520	450	POE 22	C/V	DWG17	SM21	NT6220GKV
									45	752	966	1208	1477	1773	2097	2448											
NT6220GKV	14,5	3/4	208-230V 60Hz 1~	CSR	2566	2,36	1283	1,57	55			936	1186	1482	1825	2214	16,9	220,0	26,5	F	520	450	POE 22	C/V	DWG16	SM23	NT6220GKV
									45	757	950	1203	1516	1889	2323	2818											
NT6222GK(V)	17,4	1	208-230V 60Hz 1~	CSIR	2928	1,88	1475	1,14	55			1166	1425	1708	2012	2331	17,2	220,0	33,7	F	520	450	POE 22	C/V	DWG16	SM20	NT6222GK(V)
									45	952	1185	1462	1779	2129	2506	2905											
NT6222GK(V)	17,4	1	208-230V 60Hz 1~	CSR	3051	2,30	1537	1,40	55			1185	1459	1766	2100	2459	17,2	220,0	33,7	F	520	450	POE 22	C/V	DWG16	SM23	NT6222GK(V)
									45	975	1231	1532	1873	2253	2665	3108											
NT6222GK(V)	17,4	1	115V 60Hz 1~	CSIR	3040	2,13	1565	1,34	55			1190	1455	1755	2090	2461	17,0	220,0	70,0	F	520	450	POE 22	C/V	DWG17	SM22	NT6222GK(V)
									45	985	1207	1478	1796	2160	2570	3027											
NT6222GK(V)	17,4	1	115V 60Hz 1~	CSR	3040	2,39	1569	1,58	55			1276	1570	1899	2263	2661	17,0	220,0	70,0	F	520	450	POE 22	C/V	DWG17	SM21	NT6222GK(V)
									45	988	1273	1598	1964	2370	2816	3303											
NT6224GKV	20,4	1	208-230V 60Hz 1~	CSR	3512	2,25	1808	1,55	55			1392	1690	2023	2392	2804	16,8	220,0	36,0	F	520	450	POE 22	C/V	DWG16	SM23	NT6224GKV
									45	1134	1409	1724	2083	2488	2940	3447											
NT6224GKV	20,4	1	115V 60Hz 1~	CSR	3612	2,30	1859	1,55	55			1399	1714	2068	2460	2893	16,9	234,0	77,0	F	520	450	POE 22	C/V	DWG16	SM23	NT6224GKV
									45	1144	1419	1744	2120	2543	3014	3533											
NT6226GK(V)	22,4	1	115V 60Hz 1~	CSR	3884	2,12	1942	1,41	55			1468	1811	2218	2688	3221	17,5	234,0	77,0	F	520	450	POE 22	C/V	DWG17	SM26	NT6226GK(V)
									45	1244	1512	1858	2281	2782	3361	4019											
NT6226GK(V)	22,4	1	208-230V 60Hz 1~	CSIR	3689	1,77	1985	1,35	55			1438	1752	2107	2503	2939	18,0	234,0	43,0	F	520	450	POE 22	C/V	DWG17	SM21	NT6226GK(V)
									45	1209	1500	1837	2220	2650	3127	3649											
NT6226GK(V)	22,4	1	208-230V 60Hz 1~	CSR	3734	1,93	2009	1,48	55			1493	1822	2189	2595	3039	17,5	234,0	43,0	F	520	450	POE 22	C/V	DWG17	SM22	NT6226GK(V)
									45	1220	1529	1886	2292	2745	3246	3796											
NTU6232GSV	20,4	1	200-230V 60Hz 3~	3PHASE	3966	2,77	2035	1,76	55			1504	1846	2231	2645	3100	18,4	250,0	36,0	F	520	650	POE 22	C/V	DWG19	SM27	NTU6232GSV
									45	1264	1595	1966	2387	2863	3407	3950											
NTU6232GKV	20,4	1	115V 60Hz 1~	CSR	4060	2,77	2090	1,76	55			1298	1612	1959	2339	2751	18,1	250,0	93,0	F	520	650	POE 22	C/V	DWG19	SM26	NTU6232GKV
									45	1261	1604	1989	2415	2884	3394	3947											
NTU6232GKV	20,4	1	208-230V 60Hz 1~	CSR	4032	2,84	2101	1,73	55			1561	1907	2278	2670	3090	18,1	250,0	46,0	F	520	650	POE 22	C/V	DWG19	SM26	NTU6232GKV
									45	1232	1589	1998	2439	2906	3420	3970											
NTU6234GSV	23,7	1 1/4	200-230V 60Hz 3~	3PHASE	4524	2,68	2378	1,77	55			1766	2156	2588	3060	3570	18,3	250,0	36,0	F	520	650	POE 22	C/V	DWG19	SM27	NTU6234GSV
									45	1492	1875	2306	2789	3326	3910	4530											
NTU6234GKV	23,7	1 1/4	115V 60Hz 1~	CSR	4635	2,71	2419	1,76	55			1772	2165	2613	3122	3698	18,4	250,0	81,0	F	520	650	POE 22	C/V	DWG19	SM26	NTU6234GKV
									45	1506	1885	2320	2814	3376	4019	4768											
NTU6234GKV	23,7	1 1/4	208-230V 60Hz 1~	CSR	4688	2,77	2477	1,73	55			2237	2685	3175	3705	4290	18,1	250,0	46,0	F	520	650	POE 22	C/V	DWG19	SM26	NTU6234GKV
									45	1945	2400	2905	3459	4065	4720	5420											
NTU6238GSV	26,2	1 1/2	200-230V 60Hz 3~	3PHASE	4952	2,56	2635	1,73	55			1978	2395	2846	3340	3880	18,3	250,0	36,0	F	520	650	POE 22	C/V	DWG19	SM27	NTU6238GSV
									45	1671	2092	2561	3078	3640	4250	4905											
NTU6238GKV	26,2	1 1/2	208-230V 60Hz 1~	CSR	5154	2,70	2748	1,74	55			1976	2408	2948	3510	4140	18,3	250,0	51,0	F	520	650	POE 22	C/V	DWG19	SM26	NTU6238GKV
									45	1726	2167	2626	3150	3788	4450	5195											
NTU6240GKV	27,8	1 1/2	208-230V 60Hz 1~	CSR	5368	2,60	2860	1,71	55			2065	2485	3035	3590	4210	18,3	250,0	51,0	F	520	650	POE 22	C/V	DWG19	SM26	NTU6240GKV
									45	1783	2237	2699	3240	3933	4650	5450											
NTU6240GSV	27,8	1 1/2	200-230V 60Hz 3~	3PHASE	5292	2,54	2779	1,69	55			2079	2519	3009	3540	4110	18,3	250,0	40,0	F	520	650	POE 22	C/V	DWG19	SM27	NTU6240GSV
									45	1763	2202	2694	3246	3861	4530	5250											

NOTE: performance curves are calculated from Ashrae actual curves.

R404A / R507

M/HBP 60 Hz

SERIES MODEL	DISPLACEMENT cm³	HP	VOLTAGE FREQUENCY	MOTOR TYPE	RATED POINT - ASHRAE 7,2 °C / 54,4 °C COOLING W	RATED POINT - ASHRAE 7,2 °C / 54,4 °C EFFICIENCY W/W	RATED POINT - ARI 540 -6,7°C/48,9 °C COOLING W	RATED POINT - ARI 540 -6,7°C/48,9 °C EFFICIENCY W/W	COOLING CAPACITY ARI 540 CONDENSING TEMPERATURE °C	EVAPORATING TEMPERATURE °C NO SUBCOOLING W -20	-15	-10	-5	0	5	10	WEIGHT kg	MAX HEIGHT mm	LRA A	COOLING TYPE	FAN AIR FLOW (m³/h)	OIL CHARGE cm³	OIL TYPE	EXP DEVICE	DRAWINGS EXTERNAL VIEW REF.	DRAWINGS WIRING DIAGRAM REF.	MODEL
NJ																											
NJ9226GK	21,7	1	208-230V 60Hz 1~	CSR	3708	2,20	2742	2,19	55			1364	1718	2110	2542	3013	20,7	265,0	34,0	F	800	750	POE 22	C/V	DWG14	SM17	NJ9226GK
									45	1088	1391	1754	2176	2655	3189	3780											
NJ9226GS	21,7	1	380-420V 50Hz / 440-480V 60Hz 3~	3PHASE	3801	2,50	2811	2,38	55			1236	1554	1911	2307	2743	19	265,0	10,0	F	800	750	POE 22	C/V	DWG14	SM18	NJ9226GS
									45	947	1223	1556	1942	2382	2873	3419											
NJ9232GK	26,1	1 1/4	208-230V 60Hz 1~	CSR	4704	2,40	3479	2,36	55			1695	2137	2636	3190	3802	21,5	277,0	40,0	F	800	750	POE 22	C/V	DWG14	SM17	NJ9232GK
									45	1293	1672	2131	2669	3284	3971	4737											
NJ9232GS	26,1	1 1/4	380-420V 50Hz / 440-480V 60Hz 3~	3PHASE	4716	2,50	3488	2,47	55			1464	1845	2276	2754	3282	20,4	277,0	13,0	F	800	750	POE 22	C/V	DWG14	SM18	NJ9232GS
									45	1116	1444	1840	2305	2835	3429	4090											
NJ9238GK	32,7	1 1/2	230V 60Hz 1~	CSR	5184	2,04	3834	2,04	55			2036	2505	3006	3536	4102	22,1	277,0	59,0	F	800	750	POE 22	C/V	DWG14	SM17	NJ9238GK
									45	1601	2053	2564	3133	3757	4434	5169											
NJ9238GS	32,7	1 1/2	380-420V 50Hz / 440-480V 60Hz 3~	3PHASE	5661	2,55	4186	2,51	55			2131	2649	3233	3880	4595	21,7	277,0	22,0	F	800	750	POE 22	C/V	DWG14	SM18	NJ9238GS
									45	1695	2178	2735	3365	4067	4836	5679											

NOTE: performance curves are calculated from Ashrae actual curves.

R290
LBP 50Hz

	SERIES MODEL	DISPLACEMENT cm³	HP	VOLTAGE FREQUENCY	MOTOR TYPE	RATED POINT - ASHRAE -23,3 °C / 54,4 °C COOLING W	RATED POINT - ASHRAE -23,3 °C / 54,4 °C EFFICIENCY W/W	RATED POINT - EN12900 -35°C/40 °C COOLING W	RATED POINT - EN12900 -35°C/40 °C EFFICIENCY W/W	COOLING CAPACITY EN12900 CONDENSING TEMPERATURE °C	EVAPORATING TEMPERATURE °C NO SUBCOOLING W -40	-35	-30	-25	-20	-15	-10	WEIGHT kg	MAX HEIGHT mm	LRA A	COOLING TYPE	FAN AIR FLOW (m³/h)	OIL CHARGE cm³	OIL TYPE	EXP DEVICE	DRAWINGS EXTERNAL VIEW REF.	DRAWINGS WIRING DIAGRAM REF.	MODEL
EMT/EMTE	**EMT1117U**	4,50	1/5	220-240V / 50Hz	RSCR	208	1,47	123	1,18	55			120	155	195	242	296	7,8	166	7,1	S	-	180	POE 22	C	DWG01	SM01	**EMT1117U**
										45	85	112	145	184	230	283	345											
	EMT2117U	4,50	1/5	220-240V 50Hz 1~	CSIR	184	1,37	123	1,13	55			120	155	195	242	296	7,8	166	7,7	S	-	180	POE 22	C	DWG01	SM05	**EMT2117U**
										45	84	112	145	184	230	283	345											
	EMT2121U	5,57	1/4	220-240V 50Hz 1~	CSIR	265	1,46	159	1,23	55			156	200	252	311	379	7,8	166	7,7	S	-	180	POE 22	C	DWG01	SM05	**EMT2121U**
										45	110	145	188	238	297	364	440											
	EMT1121U	5,57	1/4	220-240V 50Hz 1~	RSCR	270	1,55	159	1,24	55			156	200	252	312	379	7,8	166	7,7	S	-	180	POE 22	C	DWG01	SM00	**EMT1121U**
										45	110	145	188	238	298	364	440											
	EMT2125U	5,96	1/3	220-240V 50Hz 1~	CSIR	301	1,47	177	1,20	55			176	225	282	348	422	7,8	166	9,8	F	520	180	POE 22	C/V	DWG01	SM05	**EMT2125U**
										45	124	162	209	265	330	403	486											
	EMT1125U	5,96	1/3	220-240V 50Hz 1~	RSCR	301	1,53	177	1,24	55			176	225	282	348	422	7,8	166	9,8	S	-	180	POE 22	C	DWG01	SM00	**EMT1125U**
										45	124	162	209	265	330	403	486											
	EMT2130U	6,76	1/3	220-240V 50Hz 1~	CSIR	340	1,42	196	1,12	55			196	251	315	389	472	8	166	12,4	F	520	180	POE 22	C/V	DWG01	SM05	**EMT2130U**
										45	137	180	233	295	367	450	543											
	EMT1130U	6,76	1/3+	220-240V / 50Hz	RSCR	340	1,51	198	1,2	55			196	252	315	390	472	8	171	12,4	F	520	180	POE 22	C	DWG01	SM01	**EMT1130U**
										45	138	180	233	295	368	450	542											
	EMTE2134U	9,50	1/3	220-240V / 50Hz	CSIR	437	1,44	266	1,28	55			331	425	533	635	752	8,6	171	14,9	F	520	210	POE 22	C/V	DWG01	SM05	**EMT2134U**
										45	182	251	320	405	507	595	703											
NEK	**NEK2125U**	7,28	1/3	220-240V 50Hz 1~	CSIR	317	1,31	199	1,11	55			187	237	299	374	462	10,4	187	12,4	F	520	350	POE 22	C/V	DWG03	SM05	**NEK2125U**
										45	154	182	224	281	353	439	540											
	NEK2134U	10,00	1/2	220-240V 50Hz 1~	CSIR	449	1,36	271	1,21	55			269	338	423	523	639	11	200	13,1	F	520	350	POE 22	C/V	DWG03	SM05	**NEK2134U**
										45	208	252	315	395	494	611	746											
	NEK1150U	13,54	1/2	220-240V 50Hz 1~	RSIR	571	1,22	333	0,99	55			337	429	538	661	801	11,6	206	24,3	F	520	350	POE 22	C	DWG03	SM03	**NEK1150U**
										45	237	309	398	506	630	773	933											
	NEK2150U	13,54	1/2	220-240V 50Hz 1~	CSIR	582	1,31	334	1,06	55			339	435	550	683	835	11,6	206	19,5	F	520	350	POE 22	C/V	DWG03	SM05	**NEK2150U**
										45	237	309	403	515	650	804	979											
	NEK2160U	16,80	3/4	220-240V 50Hz 1~	CSR	729	1,44	427	1,20	55			428	547	688	848	1030	11,9	206	21	F	520	350	POE 22	C/V	DWG04	SM03	**NEK2160U**
										45	306	395	508	646	808	995	1206											
NEU	**NEU2155U**	13,54	3/4	220-240V 50Hz 1~	CSIR	626	1,42	364	1,21	55			384	487	605	737	883	11,1	200	17,5	F	520	350	POE 22	C/V	DWG03	SM05	**NEU2155U**
										45	266	345	445	565	704	863	1041											
	NEU2155U	13,54	3/4	220-240V 50Hz 1~	CSR	639	1,56	384	1,35	55			385	492	617	760	921	11,1	200	17,5	F	520	350	POE 22	C/V	DWG03	SM06	**NEU2155U**
										45	270	351	452	573	715	878	1062											
	NEU2168U	16,80	3/4	220-240V 50Hz 1~	CSR	788	1,53	457	1,27	55			455	584	738	917	1121	11,6	206	21	F	520	350	POE 22	C/V	DWG03	SM06	**NEU2168U**
										45	319	416	540	689	865	1068	1296											
NT	**NT2160U**	17,4	3/4	220-240V 50Hz 1~	CSIR	703	1,36	400	1,10	55			378	497	638	799	979	18	220	21	F	520	450	POE 22	C/V	DWG16	SM19	**NT2160U**
										45	260	348	463	601	765	954	1167											
	NT2160U	17,4	3/4	220-240V 50Hz 1~	CSR	703	1,44	407	1,18	55			381	501	644	811	1000	18	220	21	F	520	450	POE 22	C/V	DWG16	SM23	**NT2160U**
										45	266	355	470	609	774	964	1179											
	NT2170U	20,4	3/4	220-240V 50Hz 1~	CSIR	816	1,31	478	1,09	55			470	608	770	955	1162	18	220	25	F	520	450	POE 22	C/V	DWG16	SM19	**NT2170U**
										45	333	441	577	740	932	1150	1395											
	NT2170U	20,4	3/4	220-240V 50Hz 1~	CSR	831	1,44	480	1,16	55			476	620	788	981	1196	18	220	25	F	520	450	POE 22	C/V	DWG16	SM23	**NT2170U**
										45	327	441	583	753	951	1176	1430											
	NT2180U	22,4	1	220-240V 50Hz 1~	CSIR	931	1,34	550	1,12	55			536	693	874	1077	1302	18,2	234	35	F	520	450	POE 22	C/V	DWG16	SM19	**NT2180U**
										45	380	501	653	835	1047	1290	1563											
	NT2180U	22,4	1	220-240V 50Hz 1~	CSR	935	1,46	563	1,23	55			536	697	886	1101	1344	18,2	234	35	F	520	450	POE 22	C/V	DWG16	SM23	**NT2180U**
										45	388	507	659	844	1062	1312	1595											
	NT2210U	27,8	1 1/4	220-240V 50Hz 1~	CSR	1186	1,41	689	1,17	55			677	875	1108	1374	1675	18,5	234	33	F	520	450	POE 22	C/V	DWG17	SM26	**NT2210U**
										45	482	626	813	1041	1310	1620	1969											

NOTE: performance curves are calculated from Ashrae actual curves.

R290
MBP 50Hz

	SERIES MODEL	DISPLACEMENT cm³	HP	VOLTAGE FREQUENCY	MOTOR TYPE	RATED POINT - ASHRAE 7,2 °C / 54,4 °C COOLING W	RATED POINT - ASHRAE 7,2 °C / 54,4 °C EFFICIENCY W/W	RATED POINT - EN12900 -10°C/45 °C COOLING W	RATED POINT - EN12900 -10°C/45 °C EFFICIENCY W/W	COOLING CAPACITY EN12900 CONDENSING TEMPERATURE °C	EVAPORATING TEMPERATURE °C NO SUBCOOLING W -20	-15	-10	-5	0	5	10	WEIGHT kg	MAX HEIGHT mm	LRA A	COOLING TYPE	FAN AIR FLOW (m³/h)	OIL CHARGE cm³	OIL TYPE	EXP DEVICE	DRAWINGS EXTERNAL VIEW REF.	DRAWINGS WIRING DIAGRAM REF.	MODEL
EMT/EMTE	EMT6144U	4,50	1/5	220-240V 50Hz 1~	CSIR	616	2,62	343	2,00	55			293	354	423	508	608	7,8	166	7,7	S	-	180	POE 22	C/V	DWG01	SM05	EMT6144U
										45	227	282	343	413	497	593	708											
	EMT6152U	5,20	1/4	220-240V 50Hz 1~	CSIR	742	2,68	418	2,05	55			362	432	514	612	729	7,8	166	8,5	F	520	180	POE 22	C/V	DWG01	SM05	EMT6152U
										45	279	346	419	500	596	709	844											
	EMT6165U	5,96	1/4	220-240V 50Hz 1~	CSIR	840	2,57	485	1,96	55			415	495	590	700	833	7,8	166	10,4	F	520	180	POE 22	C/V	DWG01	SM05	EMT6165U
										45	321	396	478	571	681	810	964											
	EMTE6181U	7,55	1/3	220-240V / 50Hz	CSIR	1021	2,74	632	2,2	55			549	657	795	952	1109	8,6	171	16,5	F	520	210	POE 22	C/V	DWG01	SM05	EMT6181U
										45	360	465	580	695	828	995	1163											
NEK	NEK6152U	5,45	1/4	220-240V 50Hz 1~	CSIR	730	2,55	402	1,84	55			348	424	511	607	714	10,4	187	9,6	F	520	350	POE 22	C/V	DWG03	SM05	NEK6152U
										45	286	331	402	487	588	704	833											
	NEK6165U	6,20	1/4	220-240V 50Hz 1~	CSIR	839	2,44	464	1,75	55			398	484	583	696	822	10,4	187	12	F	520	350	POE 22	C/V	DWG03	SM05	NEK6165U
										45	315	381	464	561	675	803	947											
	NEK6181U	7,28	1/3	220-240V 50Hz 1~	CSIR	949	2,46	523	1,78	55			447	548	664	793	930	10,4	187	12	F	520	350	POE 22	C/V	DWG03	SM05	NEK6181U
										45	367	432	523	637	770	919	1080											
	NEK6210U	8,78	1/3	220-240V 50Hz 1~	CSIR	1169	2,55	640	1,88	55			549	670	811	969	1145	11	200	16,1	F	520	350	POE 22	C/V	DWG03	SM05	NEK6210U
										45	434	526	640	776	936	1118	1322											
	NEK6214U	12,12	1/2	220-240V 50Hz 1~	CSIR	1512	2,28	880	1,91	55			746	882	1023	1170	1323	11,7	206	17	F	520	350	POE 22	C/V	DWG03	SM05	NEK6214U
										45	574	710	870	1055	1374	1499	1758											
	NEK6214U	12,12	1/2	220-240V 50Hz 1~	CSR	1571	2,61	893	2,05	55			746	882	1023	1170	1323	11,6	206	24	F	520	350	POE 22	C/V	DWG03	SM06	NEK6214U
										45	594	731	892	1077	1285	1516	1770											
	NEK6217U	14,30	1/2	220-240V 50Hz 1~	CSIR	1820	2,21	1018	1,73	55			875	1060	1271	1508	1771	11,6	206	24	F	520	350	POE 22	C/V	DWG03	SM05	NEK6217U
										45	681	833	1018	1233	1481	1759	2068											
	NEK6217U	14,30	3/4	220-240V 50Hz 1~	CSR	1885	2,54	1051	1,94	55			893	1085	1306	1556	1834	11,6	206	24	F	520	350	POE 22	C/V	DWG03	SM06	NEK6217U
										45	702	861	1051	1273	1526	1810	2124											
NEU	NEU6210U	8,78	1/3	220-240V 50Hz 1~	CSIR	1215	2,66	676	1,98	55			583	713	860	1025	1208	10,7	200	20	F	520	350	POE 22	C/V	DWG03	SM05	NEU6210U
										45	439	556	690	840	1008	1192	1392											
	NEU6212U	10,00	1/2	220-240V 50Hz 1~	CSIR	1386	2,61	793	1,96	55			667	819	995	1195	1419	11,1	200	20,5	F	520	350	POE 22	C/V	DWG03	SM05	NEU6212U
										45	522	644	791	962	1157	1377	1621											
	NEU6212U	10,00	1/2	220-240V 50Hz 1~	CSR	1397	2,79	800	2,09	55			683	833	1006	1201	1420	11,1	200	20,5	F	520	350	POE 22	C/V	DWG03	SM06	NEU6212U
										45	523	652	803	974	1165	1378	1611											
	NEU6214U	12,12	1/2	220-240V 50Hz 1~	CSIR	1645	2,47	936	1,96	55			796	969	1167	1388	1634	11,2	200	18	F	520	350	POE 22	C/V	DWG03	SM05	NEU6214U
										45	619	763	934	1133	1361	1616	1899											
	NEU6214U	12,12	1/2	220-240V 50Hz 1~	CSR	1682	2,75	944	2,11	55			807	981	1179	1401	1648	11,2	200	18	F	520	350	POE 22	C/V	DWG03	SM06	NEU6214U
										45	624	770	943	1143	1369	1623	1903											
	NEU6217U	14,30	3/4	220-240V 50Hz 1~	CSIR	1903	2,35	1086	1,95	55			929	1125	1346	1592	1863	11,6	206	21	F	520	350	POE 22	C/V	DWG03	SM05	NEU6217U
										45	721	888	1085	1311	1566	1851	2165											
	NEU6217U	14,30	3/4	220-240V 50Hz 1~	CSR	1967	2,76	1109	2,17	55			956	1161	1393	1653	1941	11,6	206	21	F	520	350	POE 22	C/V	DWG03	SM06	NEU6217U
										45	734	909	1115	1353	1622	1924	2257											
	NEU6220U	16,80	3/4	220-240V 50Hz 1~	CSR	2256	2,7	UD	UD	55	UD	UD	UD	UD	UD	UD	UD	12	206	UD	F	520	350	POE 22	C/V	DWG03	SM06	NEU6220U
										45																		
NT	NT6217U	14,5	1/2	220-240V 50Hz 1~	CSIR	1786	2,58	952	1,87	55			792	987	1215	1473	1764	16,9	220	25	F	520	450	POE 22	C/V	DWG16	SM19	NT6217U
										45	506	756	952	1183	1449	1752	2089											
	NT6220U	17,4	3/4	220-240V 50Hz 1~	CSIR	2202	2,45	1193	1,76	55			995	1236	1506	1803	2129	17	220	30	F	520	450	POE 22	C/V	DWG16	SM19	NT6220U
										45	757	954	1193	1472	1791	2150	2549											
	NT6220U	17,4	3/4	220-240V 50Hz 1~	CSR	2250	2,79	1167	1,88	55			976	1215	1492	1806	2158	17	220	30	F	520	450	POE 22	C/V	DWG16	SM23	NT6220U
										45	742	934	1167	1443	1761	2121	2524											
	NT6222U	20,4	3/4	220-240V 50Hz 1~	CSIR	2537	2,37	1372	1,74	55			1118	1400	1726	2097	2505	17	220	30	F	520	450	POE 22	C/V	DWG16	SM19	NT6222U
										45	865	1095	1372	1695	2060	2465	2907											
	NT6222U	20,4	1	220-240V 50Hz 1~	CSR	2635	2,77	1412	1,92	55			1177	1471	1803	2174	2581	17	220	30	F	520	450	POE 22	C/V	DWG16	SM23	NT6222U
										45	897	1132	1412	1735	2104	2513	2965											
	NT6224U	22,4	1	220-240V 50Hz 1~	CSR	2843	2,73	1558	2,11	55			1274	1583	1938	2336	2773	17,2	220	26	F	520	450	POE 22	C/V	DWG16	SM23	NT6224U
										45	966	1239	1557	1920	2321	2761	3232											
	NT6230U	27,8	1 1/4	220-240V 50Hz 1~	CSR	3620	2,6	1937	1,93	55			1623	1998	2437	2850	3350	17,7	220	39	F	520	450	POE 22	C/V	DWG16	SM23	NT6230U
										45	1240	1561	1939	2376	2871	3350	3810											

U.D. = under development

NOTE: performance curves are calculated from Ashrae actual curves.

R290
LBP 60Hz

	SERIES MODEL	DISPLACEMENT cm³	HP	VOLTAGE FREQUENCY	MOTOR TYPE	RATED POINT - ASHRAE -23,3 °C / 54,4 °C COOLING W	RATED POINT - ASHRAE -23,3 °C / 54,4 °C EFFICIENCY W/W	RATED POINT - ARI 540 -23,3°C/48,9 °C COOLING W	RATED POINT - ARI 540 -23,3°C/48,9 °C EFFICIENCY W/W	COOLING CAPACITY ARI 540 CONDENSING TEMPERATURE °C	EVAPORATING TEMPERATURE °C NO SUBCOOLING W -40	-35	-30	-25	-20	-15	-10	WEIGHT kg	MAX HEIGHT mm	LRA A	COOLING TYPE	FAN AIR FLOW (m³/h)	OIL CHARGE cm³	OIL TYPE	EXP DEVICE	DRAWINGS EXTERNAL VIEW REF.	DRAWINGS WIRING DIAGRAM REF.	MODEL
NEK	NEK2134U	10,00	1/2	115V 60Hz 1~	CSIR	539	1,39	415	1,10	55			268	344	433	535	650	10,7	200	28	F	520	350	POE 22	C/V	DWG04	SM04	NEK2134U
										45	194	251	325	415	521	643	780											
NEK	NEK2150U	13,54	1/2	115V 60Hz 1~	CSIR	687	1,25	550	1,02	55			352	451	566	699	848	11,3	206	41,5	F	520	350	POE 22	C/V	DWG04	SM04	NEK2150U
										45	248	321	418	537	678	842	1029											
NEK	NEK2150U	13,54	1/2	115V 60Hz 1~	CSR	708	1,38	554	1,11	55			353	455	575	716	875	11,3	206	41,5	F	520	350	POE 22	C/V	DWG04	SM06	NEK2150U
										45	255	332	430	551	693	858	1045											
NEU	NEU2168U	16,8	3/4	115-127V 60Hz 1~	CSR	950	1,5	749	1,2	54.4			483	623	787	977	1191	11,6	206	49	F	520	350	POE 22	C/V	DWG04	SM06	NEU2168U
										45	324	426	562	733	938	1178	1453											
NT	NT2160U(V)	17,4	3/4	208-230V 60Hz 1~	CSIR	828	1,34	604	1,00	55			401	515	650	806	982	16,8	220	28	F	520	450	POE 22	C/V	DWG16	SM20	NT2160U(V)
										45	298	382	492	626	786	971	1179											
NT	NT2160UV	17,4	3/4	115V 60Hz 1~	CSR	827	1,42	638	1,1	55			400	521	667	837	1031	16,5	220	54,4	F	520	450	POE 22	C/V	DWG16	SM21	NT2160UV
										45	300	379	490	633	807	1013	1250											
NT	NT2170U(V)	20,4	3/4	208-230V 60Hz 1~	CSIR	921	1,3	672	0,98	55			446	573	726	903	1104	17	220	30	F	520	450	POE 22	C/V	DWG16	SM20	NT2170U(V)
										45	325	419	544	698	883	1097	1340											
NT	NT2170UV	20,4	3/4	115V 60Hz 1~	CSR	970	1,38	772	1,12	55			495	641	818	1026	1265	16,5	220	55	F	520	450	POE 22	C/V	DWG17	SM21	NT2170UV
										45	372	474	613	787	997	1243	1525											
NT	NT2180UV	22,4	1	208-230V 60Hz 1~	CSR	1021	1,41	830	1,12	55			535	695	886	1107	1360	16,7	220	30	F	520	450	POE22	C/V	DWG16	SM21	NT2180UV
										45	396	506	656	845	1074	1341	1648											
NT	NT2180UV	22,4	1	115V 60Hz 1~	CSR	1048	1,38	832	1,12	55			534	691	876	1089	1330	16,5	220	54,5	F	520	450	POE 22	C/V	DWG16	SM21	NT2180UV
										45	396	509	659	844	1065	1323	1616											
NT	NT2210UV	27,8	1 1/4	208-230V 60Hz 1~	CSR	1281	1,42	1051	1,12	55			671	863	1093	1360	1665	17,8	234	37	F	520	450	POE22	C/V	DWG16	SM26	NT2210UV
										45	494	621	798	1024	1301	1627	2003											
NT	NT2210UV	27,8	1 1/4	115V 60Hz 1~	CSR	1322	1,39	1060	1,11	55			680	872	1104	1374	1684	17,8	234	67	F	520	450	POE 22	C/V	DWG16	SM26	NT2210UV
										45	514	651	833	1063	1338	1661	2029											

NOTE: performance curves are calculated from Ashrae actual curves.

R290
MBP 60Hz

	SERIES MODEL	DISPLACEMENT cm³	HP	VOLTAGE FREQUENCY	MOTOR TYPE	RATED POINT - ASHRAE 7,2°C / 54,4°C COOLING W	RATED POINT - ASHRAE 7,2°C / 54,4°C EFFICIENCY W/W	RATED POINT - ARI 540 -6,7°C / 48,9°C COOLING W	RATED POINT - ARI 540 -6,7°C / 48,9°C EFFICIENCY W/W	COOLING CAPACITY ARI 540 CONDENSING TEMPERATURE °C	EVAPORATING TEMPERATURE °C NO SUBCOOLING W -20	-15	-10	-5	0	WEIGHT kg	MAX HEIGHT mm	LRA A	COOLING TYPE	FAN AIR FLOW (m³/h)	OIL CHARGE cm³	OIL TYPE	EXP DEVICE	DRAWINGS EXTERNAL VIEW REF.	DRAWINGS WIRING DIAGRAM REF.	MODEL
NEK	NEK6152U	5,45	1/4	115V 60Hz 1~	CSIR	862	2,44	449	1,51	55			345	421	507	9,8	187	25	F	520	350	POE 22	C/V	DWG04	SM04	NEK6152U
										45	264	335	418	512	517												
NEK	NEK6165U	6,20	1/4	115V 60Hz 1~	CSIR	992	2,41	505	1,50	55			404	488	586	10	187	28	F	520	350	POE 22	C/V	DWG04	SM04	NEK6165U
										45	318	395	486	593	714												
NEK	NEK6210U	8,78	1/3	115V 60Hz 1~	CSIR	1368	2,48	717	1,60	55			570	698	843	10,6	200	37	F	520	350	POE 22	C/V	DWG04	SM04	NEK6210U
										45	445	556	685	831	996												
NEK	NEK6213U	12,12	1/2	115V 60Hz 1~	CSIR	1841	2,13	998	1,48	55			781	949	1137	11,4	206	44	F	520	350	POE 22	C/V	DWG04	SM04	NEK6213U
										45	613	757	930	1132	1364												
NEU	NEU6181U	7,28	1/3	115V-127V 60Hz 1~	CSIR	1197	2,7	633	1,72	55			495	611	744	10,1	187	30	F	520	350	POE 22	C/V	DWG04	SM04	NEU6181U
										45	388	487	605	742	897												
NEU	NEU6214U	12,12	1/2	115V 60Hz 1~	CSIR	1989	2,46	1085	1,74	55			865	1051	1261	11,5	206	42	F	520	350	POE 22	C/V	DWG04	SM04	NEU6214U
										45	678	836	1022	1234	1474												
NEU	NEU6214U	12,12	1/2	115V 60Hz 1~	CSR	2021	2,68	1097	1,86	55			873	1060	1273	11,5	206	42	F	520	350	POE 22	C/V	DWG04	SM06	NEU6214U
										45	685	845	1034	1251	1496												
NT	NT6217UV	14,5	1/2	115V 60Hz 1~	CSIR	2101	2,52	1005	1,58	55			801	986	1184	16,2	220	44	F	520	450	POE 22	C/V	DWG16	SM20	NT6217U
										45	608	749	949	1210	1531												
NT	NT6217UV	14,5	1/2	115V 60Hz 1~	CSR	2176	2,81	1028	1,74	55			812	1007	1220	16,2	220	44	F	520	450	POE 22	C/V	DWG16	SM23	NT6217U
										45	613	752	956	1225	1558												
NT	NT6220UV	17,4	3/4	115V 60Hz 1~	CSR	2644	2,85	1356	1,84	55			1007	1266	1565	16,6	220	54,5	F	520	450	POE 22	C/V	DWG17	SM21	NT6220UV
										45	752	973	1237	1543	1890												
NT	NT6222UV	20,4	3/4	115V 60Hz 1~	CSR	3023	2,73	1522	1,78	55			1181	1476	1798	16,5	220	54,5	F	520	450	POE 22	C/V	DWG16	SM23	NT6222UV
										45	923	1146	1433	1785	2202												
NT	NT6224UV	22,4	1	208-230V 60Hz 1~	CSR	3370	2,67	1744	1,75	55			1355	1673	2028	16,8	220	33,7	F	520	450	POE 22	C/V	DWG16	SM23	NT6224UV
										45	1041	1315	1634	1995	2401												

U.D. = under development

NOTE: performance curves are calculated from Ashrae actual curves.

R600a

LBP 50Hz

	SERIES MODEL	DISPLACEMENT cm³	HP	VOLTAGE FREQUENCY	MOTOR TYPE	RATED POINT - ASHRAE -23,3 ºC / 54,4 °C COOLING W	RATED POINT - ASHRAE -23,3 ºC / 54,4 °C EFFICIENCY W/W	RATED POINT - CECOMAF -25°C/55 ºC COOLING W	RATED POINT - CECOMAF -25°C/55 ºC EFFICIENCY W/W	COOLING CAPACITY CECOMAF CONDENSING TEMPERATURE ºC	EVAPORATING TEMPERATURE ºC NO SUBCOOLING W -30	-25	-20	-15	-10	-5	WEIGHT kg	MAX HEIGHT mm	LRA A	COOLING TYPE	FAN AIR FLOW (m³/h)	OIL CHARGE cm³	OIL TYPE	EXP DEVICE	DRAWINGS EXTERNAL VIEW REF.	DRAWINGS WIRING DIAGRAM REF.	MODEL
EMY	**EMY20CLC**	3,97	1/12	220-240V / 50Hz	RSIR	61	1,4	45	1,1	55	34	45	60	77	98	121	7,4	166	2,35	S	-	180	AB 5	C	DWG01	SM00	**EMY20CLC**
										45	40	54	71	92	116	144											
EMY	**EMY26CLC**	5,20	1/12	220-240V / 50Hz	RSIR	83	1,5	61	1,18	55	45	61	81	105	133	165	7,4	166	2,8	S	-	180	AB 5	C	DWG01	SM00	**EMY26CLC**
										45	55	73	95	121	152	187											
EMY	**EMY32CLC**	5,96	1/10	220-240V / 50Hz	RSIR	97	1,51	72	1,19	55	53	72	94	120	151	189	7,4	166	3,6	S	-	180	AB 5	C	DWG01	SM00	**EMY32CLC**
										45	64	86	111	141	176	218											
EMY	**EMY40CLC**	7,24	1/8	220-240V / 50Hz	RSIR	119	1,53	90	1,21	55	66	90	116	148	186	232	7,6	166	4,3	S	-	180	AB 5	C	DWG01	SM00	**EMY40CLC**
										45	80	107	136	171	214	267											
EMY	**EMY46CLC**	7,96	1/8+	220-240V / 50Hz	RSIR	135	1,56	101	1,23	55	75	102	135	174	219	268	7,7	166	4,3	S	-	180	AB 5	C	DWG01	SM00	**EMY46CLC**
										45	90	120	157	200	249	303											
EMY	**EMY55CLP**	9,05	1/6	220-240V / 50Hz	RSIR	156	1,56	114	1,23	55	85	114	150	192	241	296	7,7	166	5,5	S	-	180	AB 5	C	DWG01	SM00	**EMY55CLP**
										45	102	135	175	222	277	340											
EMY	**EMY66CLP**	10,62	1/6+	220-240V / 50Hz	RSIR	177	1,54	134	1,22	55	98	134	175	224	280	346	7,9	166	5,6	S	-	180	ISO 5	C	DWG01	SM00	**EMY66CLP**
										45	118	156	202	256	320	394											
EMX	**EMX20CLC**	3,97	1/12	220-240V / 50Hz	RSCR	61	1,51	45	1,18	55	34	45	60	77	98	121	7,5	166	2	S	-	180	ISO 5	C	DWG01	SM01	**EMX20CLC**
										45	40	54	71	92	116	144											
EMX	**EMX32CLC**	5,96	1/10	220-240V / 50Hz	RSCR	102	1,66	72	1,3	55	53	72	94	120	151	189	7,5	166	2,6	S	-	180	ISO 5	C	DWG01	SM01	**EMX32CLC**
										45	64	86	111	141	176	218											
EMX	**EMX46CLC**	7,96	1/8+	220-240V / 50Hz	RSCR	135	1,66	101	1,32	55	75	102	135	174	219	268	7,66	166	3,8	S	-	180	ISO 5	C	DWG01	SM01	**EMX46CLC**
										45	90	120	157	200	249	303											
EMX	**EMX55CLC**	9,05	1/6	220-240V 50Hz 1~	RSCR	155	1,72	115	1,31	55	90	115	156	197	250	310	7,4	166	5,67	S	-	180	ISO 5	C	DWG01	SM01	**EMX55CLC**
										45	106	136	179	222	282	350											
EMX	**EMX70CLC**	11,15	1/5	220-240V / 50Hz	RSCR	191	1,71	143	1,34	55	103	142	184	233	290	360	7,7	166	6	S	-	150	AB 5	C	DWG01	SM01	**EMX70CLC**
										45	123	164	210	263	327	403											
EMX	**EMX80CLT**	12,21	1/5+	220-240V / 50Hz	RSCR	212	1,74	162	1,36	55	118	158	207	265	331	406	7,9	171	7,8	S	-	150	AB 5	C	DWG01	SM01	**EMX80CLT**
										45	139	185	240	305	380	464											

EMY = standard efficiency
EMX = high efficiency

NOTE: performance curves are calculated from Ashrae actual curves.

R600a
HBP 50Hz

	SERIES MODEL	DISPLACEMENT cm³	HP	VOLTAGE FREQUENCY	MOTOR TYPE	RATED POINT - ASHRAE 7,2 °C / 54,4 °C COOLING W	RATED POINT - ASHRAE 7,2 °C / 54,4 °C EFFICIENCY W/W	RATED POINT - EN12900 5°C/50 °C COOLING W	RATED POINT - EN12900 5°C/50 °C EFFICIENCY W/W	COOLING CAPACITY EN12900 CONDENSING TEMPERATURE °C	EVAPORATING TEMPERATURE °C NO SUBCOOLING W -15	-10	-5	0	5	10	WEIGHT kg	MAX HEIGHT mm	LRA A	COOLING TYPE	FAN AIR FLOW (m³/h)	OIL CHARGE cm³	OIL TYPE	EXP DEVICE	DRAWINGS EXTERNAL VIEW REF.	DRAWINGS WIRING DIAGRAM REF.	MODEL
EMT/EMU	EMT30CDP	4,50	1/8	220-240V 50Hz 1~	RSIR	256	2,53	246	2,65	55		125	155	191	232	278	7,2	158	3,7	S	-	180	POE 22	C	DWG01	SM00	EMT30CDP
										45	113	140	176	213	258	310											
	EMU5125Y	4,50	1/10	220-240V / 50Hz	RSIR	267	2,73	244	2,52	55		119	150	184	224	270	7	158	3,7	S	-	180	AB 5	C	DWG01	SM00	EMU5125Y
										45	109	138	172	212	257	307											
	EMU5125Y	4,50	1/10	220-240V / 50Hz	RSCR	267	2,88	244	2,82	55		120	151	187	228	274	7	158	3,7	S	-	180	AB 5	C	DWG01	SM01	EMU5125Y
										45	111	140	174	214	259	310											
	EMT45CDP	6,79	1/8	220-240V 50Hz 1~	RSIR	389	2,56	360	2,47	55		172	226	276	338	411	7,7	166	5,8	S	-	180	POE 22	C	DWG01	SM00	EMT45CDP
										45	127	163	262	315	382	464											
	EMU5132Y	6,79	1/8+	220-240V / 50Hz	RSIR	402	2,61	358	2,54	55		182	228	280	336	400	7,4	166	6,1	S	-	180	AB 5	C	DWG01	SM00	EMU5132Y
										45	165	208	258	316	382	454											
	EMU5132Y	6,79	1/8+	220-240V / 50Hz	RSCR	406	2,82	363	2,74	55		184	230	282	342	408	7,4	166	6,1	S	-	180	AB 5	C	DWG01	SM01	EMU5132Y
										45	168	211	262	320	385	460											
	EMT6144Y	9,05	1/5	220-240V 50Hz 1~	CSIR	543	2,48	486	2,41	55		250	310	377	455	543	7,8	166	7,7	F	520	180	POE 22	C/V	DWG01	SM05	EMT6144Y
										45	223	282	350	427	515	614											
	EMT6160Y	11,15	1/4	220-240V 50Hz 1~	CSIR	653	2,27	588	2,2	55		303	375	458	552	658	7,8	166	9,8	F	520	180	POE 22	C/V	DWG01	SM05	EMT6160Y
										45	277	347	427	520	622	738											
NEK	NEK6160Y	12,12	1/4	220-240V 50Hz 1~	CSIR	677	2,53	606	2,43	55		294	372	464	567	678	10,6	187	12,4	F	520	350	POE 22	C/V	DWG03	SM05	NEK6160Y
										45	267	338	425	528	641	764											
	NEK6170Y	14,30	1/4	220-240V 50Hz 1~	CSIR	809	2,47	720	2,38	55		358	449	554	674	807	10,6	187	12,4	F	520	350	POE 22	C/V	DWG03	SM05	NEK6170Y
										45	326	412	512	630	764	913											
	NEK6187Y	16,80	1/3	220-240V 50Hz 1~	CSIR	907	2,39	805	2,29	55		391	494	613	749	774	11	200	16,1	F	520	350	POE 22	C/V	DWG03	SM05	NEK6187Y
										45	359	457	572	705	856	336											

NOTE: performance curves are calculated from Ashrae actual curves.

R600a
L/MBP 50Hz

	SERIES MODEL	DISPLACEMENT cm³	HP	VOLTAGE FREQUENCY	MOTOR TYPE	RATED POINT - ASHRAE -23,3 °c / 54,4°C COOLING W	RATED POINT - ASHRAE -23,3 °c / 54,4°C EFFICIENCY W/W	RATED POINT - EN12900 -35 / 40 °C COOLING W	RATED POINT - EN12900 -35 / 40 °C EFFICIENCY W/W	COOLING CAPACITY EN12900 CONDENSING TEMPERATURE °C	EVAPORATING TEMPERATURE °C NO SUBCOOLING W -35	-30	-25	-20	-15	-10	-5	0	WEIGHT kg	MAX HEIGHT mm	LRA A	COOLING TYPE	FAN AIR FLOW (m³/h)	LUBRICANT CHARGE cm³	LUBRICANT TYPE	EXP DEVICE	DRAWINGS EXTERNAL VIEW REF.	DRAWINGS WIRING DIAGRAM REF.	MODEL
EM	EMY3118Y	12,21	1/5	220-240V 50Hz 1~	RSIR	210	1,48	UD	UD	55	UD	UD	UD	UD	UD	UD	UD	UD	7,6	171	7,8	S	-	150	AB 5	C/V	DWG02	SM03	EMY3118Y
										45																			
	EMY3118Y	12,21	1/5	220-240V 50Hz 1~	RSCR	212	1,56	UD	UD	55	UD	UD	UD	UD	UD	UD	UD	UD	7,6	171	7,8	S	-	150	AB 5	C/V	DWG02	SM01	EMY3118Y
										45																			
	EMX3118Y	12,21	1/5	220-240V 50Hz 1~	RSCR	212	1,71	UD	UD	55	UD	UD	UD	UD	UD	UD	UD	UD	7,8	171	7,5	S	-	150	AB 5	C/V	DWG02	SM01	EMX3118Y
										45																			
NB	NBY5170Y	14,30	3/4	220-240V 50Hz 1~	RSCR	842	3,1	UD	UD	55	UD	UD	UD	UD	UD	UD	UD	UD	10,8	206	15	S	-	350	AB 5	C/V	DWG02	SM01	NBY5170Y
										45																			

U.D. = under development

NOTE: performance curves are calculated from Ashrae actual curves.

External Views & Wiring Diagrams

EXTERNAL VIEWS

DWG01 - EMT SERIES European Base Plate

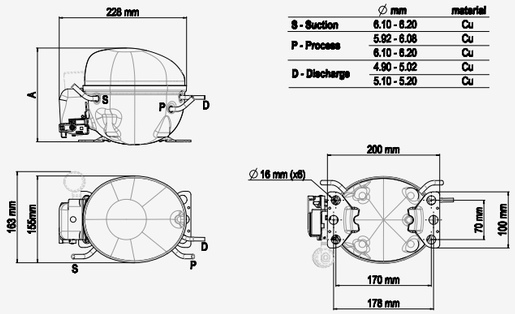

	∅ mm	material
S - Suction	6.10 - 6.20	Cu
P - Process	5.92 - 6.06	Cu
	6.10 - 6.20	Cu
D - Discharge	4.90 - 5.02	Cu
	5.10 - 5.20	Cu

DWG02 / DWG03 - NE SERIES European Base Plate

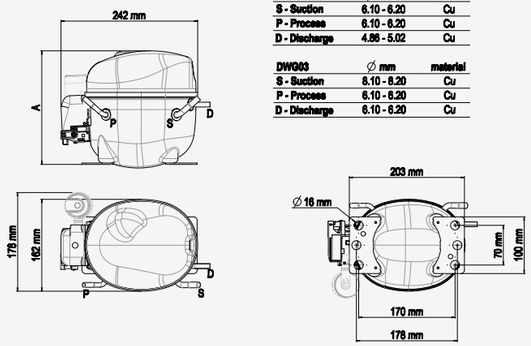

DWG02	∅ mm	material
S - Suction	6.10 - 6.20	Cu
P - Process	6.10 - 6.20	Cu
D - Discharge	4.86 - 5.02	Cu

DWG03	∅ mm	material
S - Suction	6.10 - 6.20	Cu
P - Process	6.10 - 6.20	Cu
D - Discharge	6.10 - 6.20	Cu

DWG 15 - NT SERIES

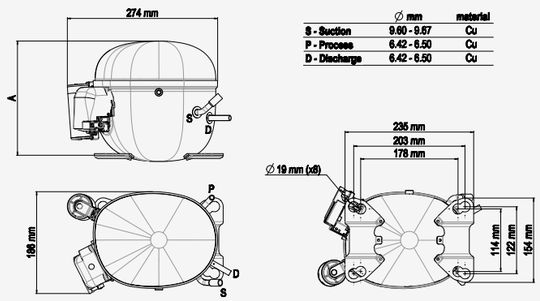

	∅ mm	material
S - Suction	9.60 - 9.67	Cu
P - Process	6.42 - 6.50	Cu
D - Discharge	6.42 - 6.50	Cu

DWG16 - NT SERIES

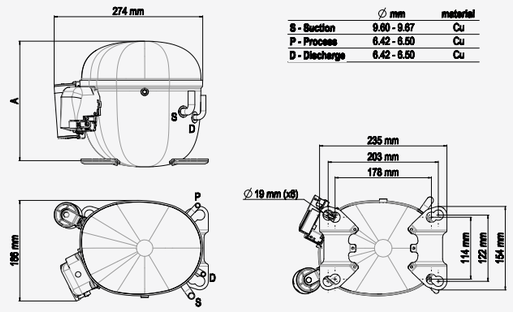

	∅ mm	material
S - Suction	9.60 - 9.67	Cu
P - Process	6.42 - 6.50	Cu
D - Discharge	6.42 - 6.50	Cu

DWG04 - NE SERIES Universal Base Plate

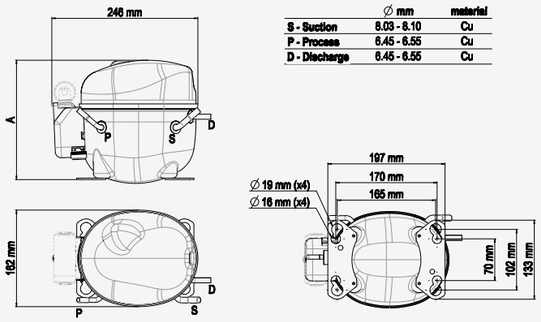

	∅ mm	material
S - Suction	8.03 - 8.10	Cu
P - Process	6.45 - 6.55	Cu
D - Discharge	6.45 - 6.55	Cu

DWG14 - NJ SERIES

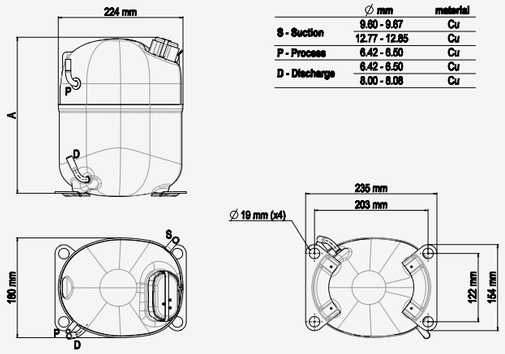

	∅ mm	material
S - Suction	9.60 - 9.67	Cu
	12.77 - 12.85	Cu
P - Process	6.42 - 6.50	Cu
D - Discharge	6.42 - 6.50	Cu
	8.00 - 8.08	Cu

DWG17 - NT SERIES

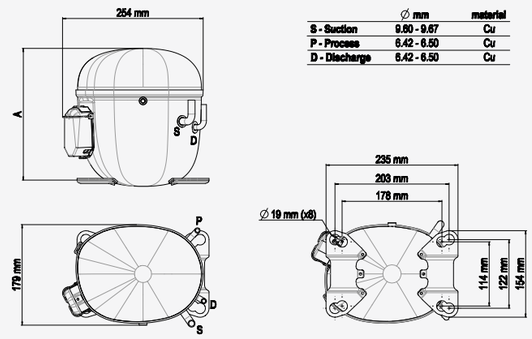

	∅ mm	material
S - Suction	9.60 - 9.67	Cu
P - Process	6.42 - 6.50	Cu
D - Discharge	6.42 - 6.50	Cu

DWG 19 - NTU SERIES

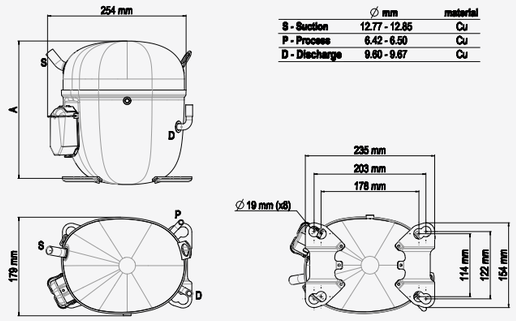

	∅ mm	material
S - Suction	12.77 - 12.85	Cu
P - Process	6.42 - 6.50	Cu
D - Discharge	9.60 - 9.67	Cu

External Views & Wiring Diagrams

WIRING DIAGRAMS KEY

- OVERLOAD PROTECTOR
- CURRENT START RELAY
- 3CR CURRENT START RELAY
- RUN CAPACITOR
- OPTIONAL RUN CAPACITOR
- FAN
- LAMP
- 3-PHASE MOTOR
- LOW-HIGH PRESSURE SWITCH
- EARTH CONNECTION
- 3-PHASE SUPPLY
- SINGLE PHASE SUPPLY
- COMMON
- RUN
- TERMINAL BLOCK
- Wh WHITE CABLE
- Bl BLUE CABLE
- YG YELLOW-GREEN CABLE
- CONNECTIONS SUPPLIED
- PTC START DEVICE
- INTEGRATED PTC DEVICE
- CURRENT START RELAY WITH CAPACITOR CONNECTIONS
- 3ARR3 START RELAY (voltage).
- RUN CAPACITOR (MANDATORY - NOT SUPPLIED)
- START CAPACITOR
- PUSHBUTTON
- SINGLE PHASE MOTOR
- THERMOSTAT
- PILOT CIRCUIT 24 OR 220 V
- COMMON (INTERNAL OVERLOAD PROTECTOR)
- START
- Br BROWN CABLE
- Bk BLACK CABLE
- Re RED CABLE
- CONNECTIONS TO BE MADE BY THE CUSTOMER (NOT SUPPLIES

WIRING DIAGRAMS

SM00 - EMT/NE SERIES RSIR PTC European Version

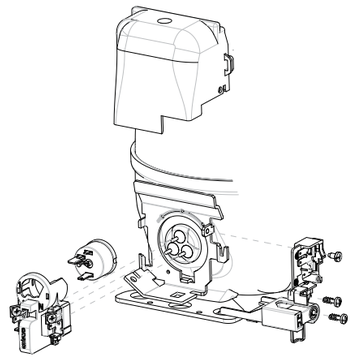

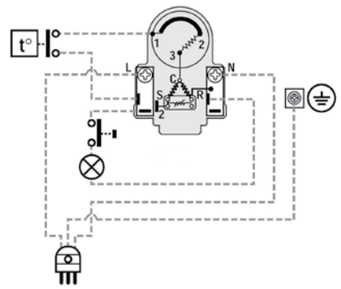

SM01 - EMT/NE SERIES RSCR PTC European Version

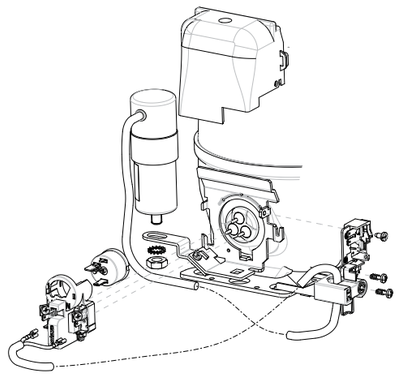

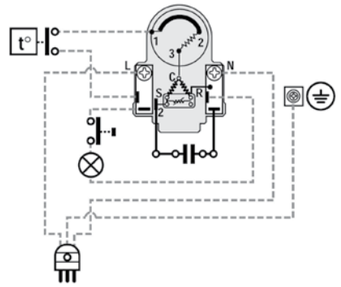

SM02 - EMT/NE SERIES RSCR TSD European Version

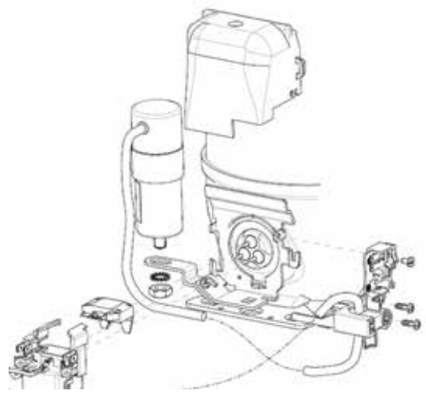

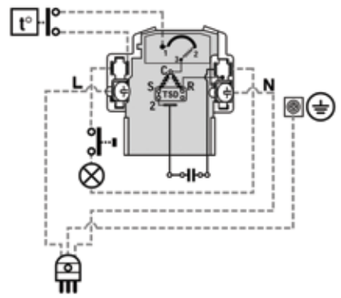

External Views & Wiring Diagrams

WIRING DIAGRAMS

SM03 - EMT/NE SERIES RSIR Terminal Board & Start Device

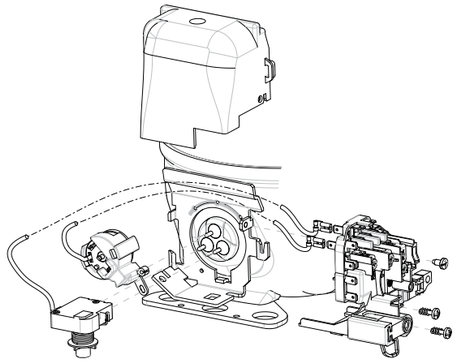

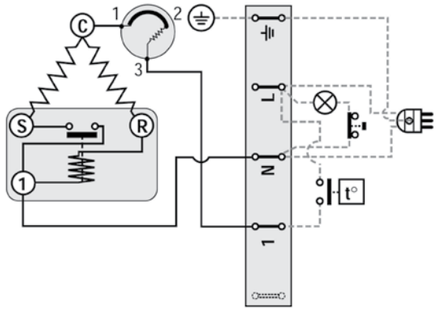

SM04 - EMT/NE SERIES CSIR American Version

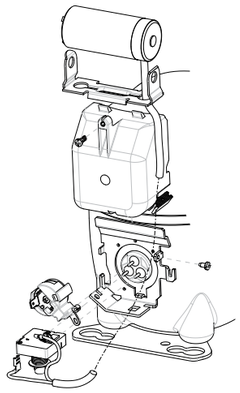

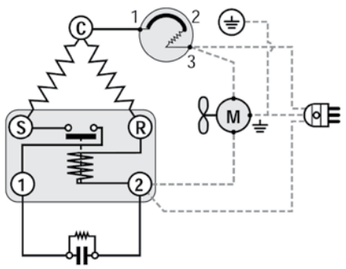

SM05 - EMT/NE SERIES CSIR Terminal Board & Start Device

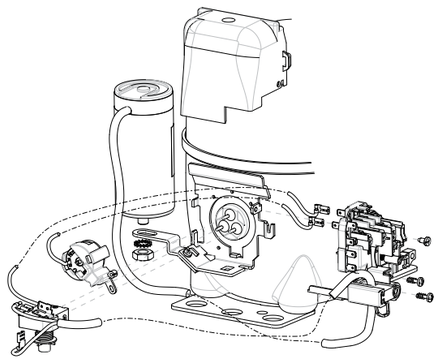

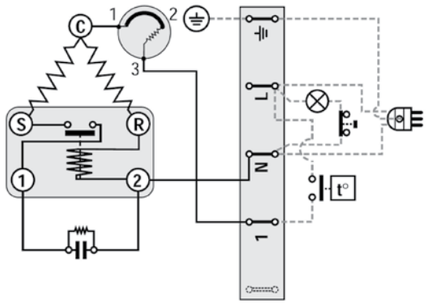

SM06 - NE SERIES CSR Box

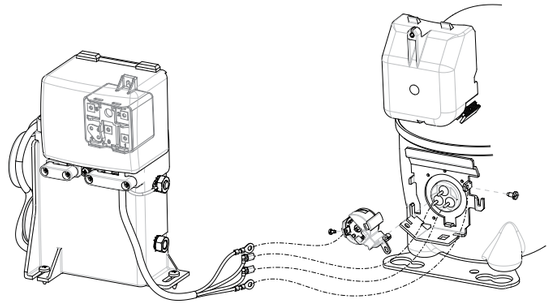

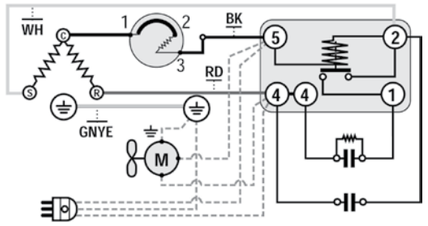

SM14 - NJ CSIR Box

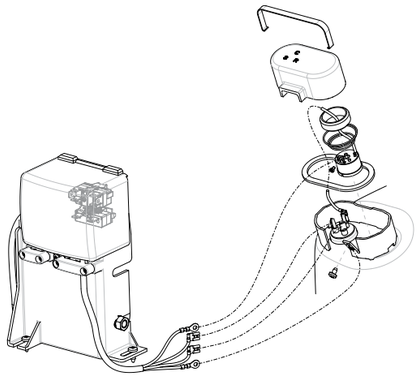

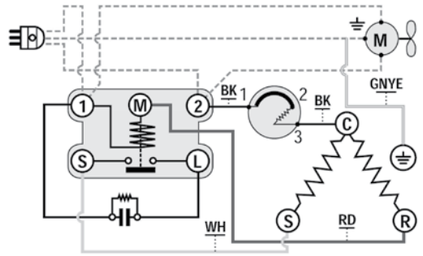

SM15 - NJ PSC

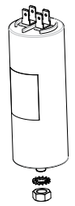

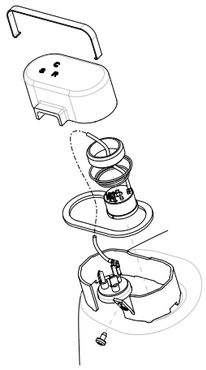

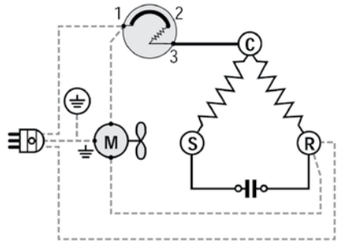

External Views & Wiring Diagrams

WIRING DIAGRAMS

SM16 - NJ SERIES CSR Box (Internal Overload Protector)

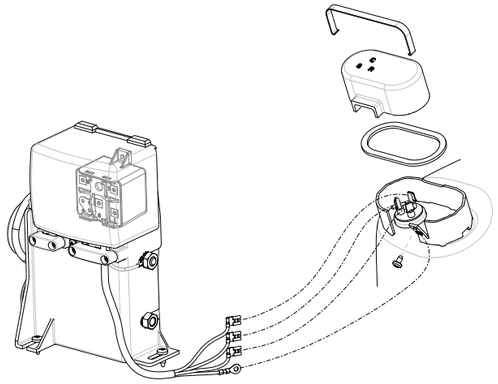

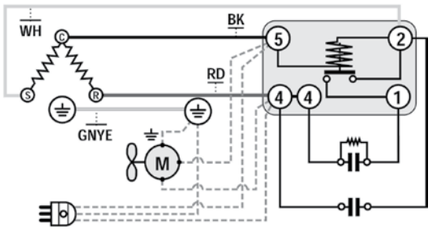

SM17 - NJ CSR Box (External Overload Protector)

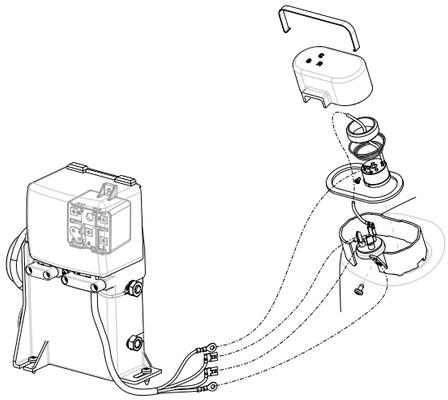

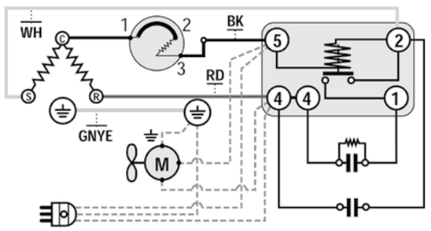

SM18 - NJ SERIES 3-Phase (Internal Overload Protector)

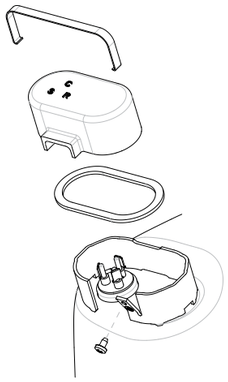

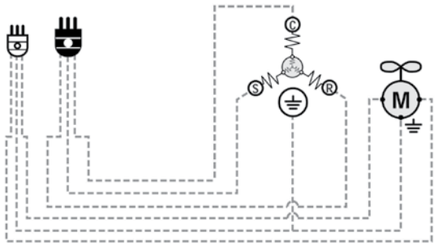

SM19 - NT SERIES CSIR Terminal Board

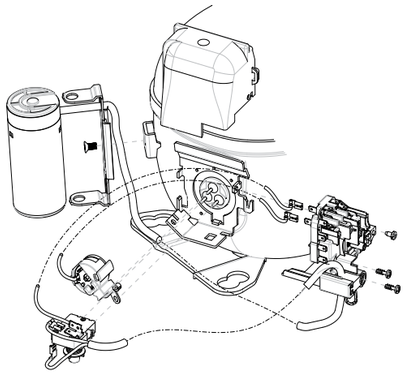

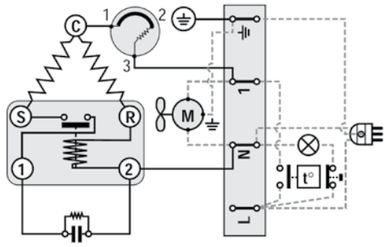

SM20 - NT SERIES CSIR – American Version

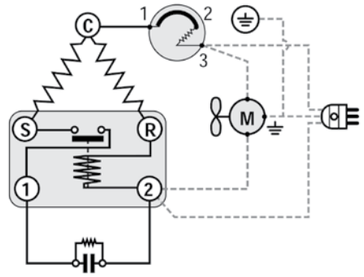

SM21 - NT SERIES CSR Box

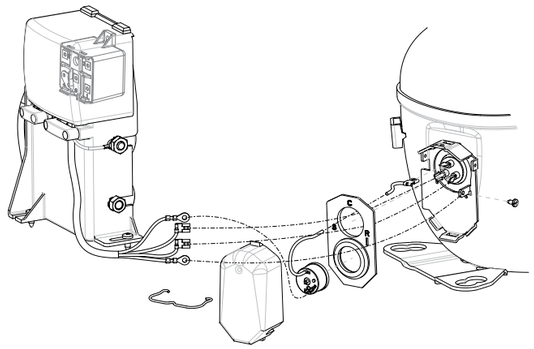

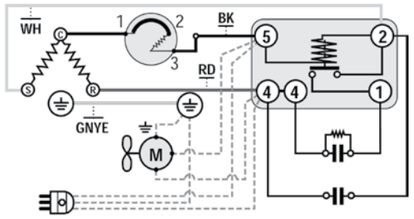

External Views & Wiring Diagrams

WIRING DIAGRAMS

SM22 - NT SERIES CSIR Box

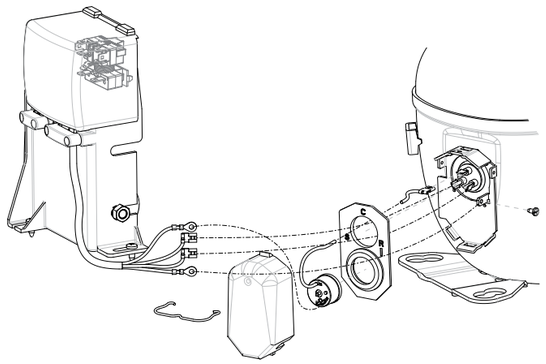

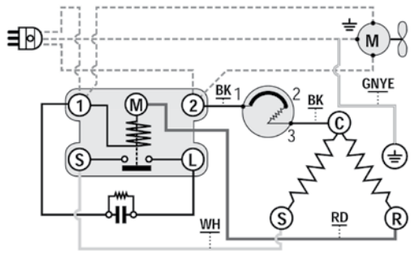

SM23 - NT SERIES CSR Box

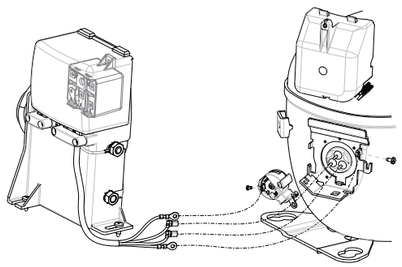

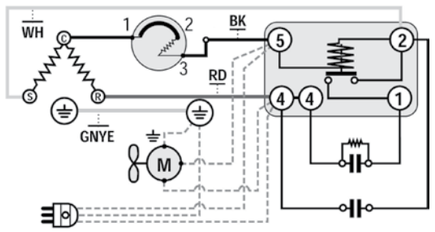

SM26 - NT SERIES CSR Box (Internal Overload Protector)

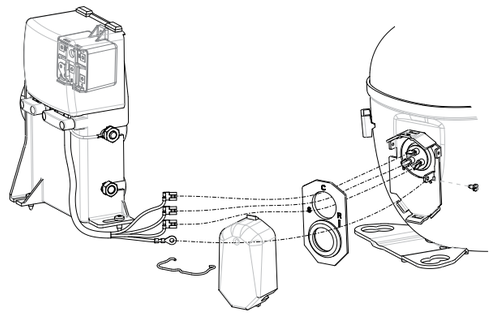

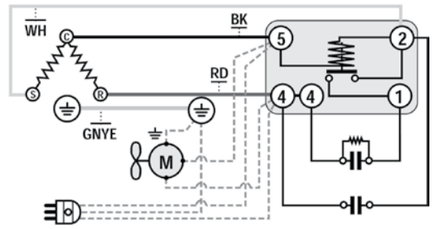

SM27 - NT SERIES 3-Phase (Internal + External Overload Protector)

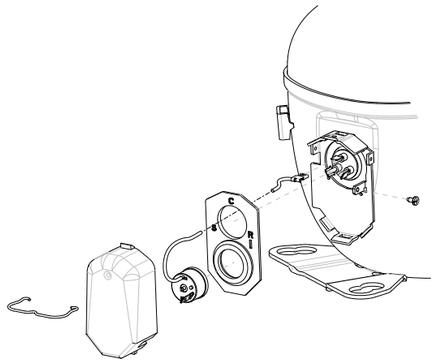

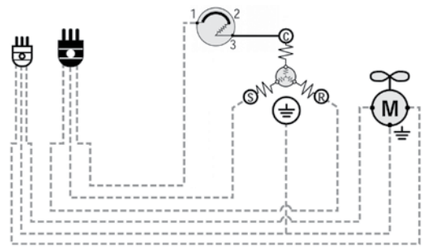

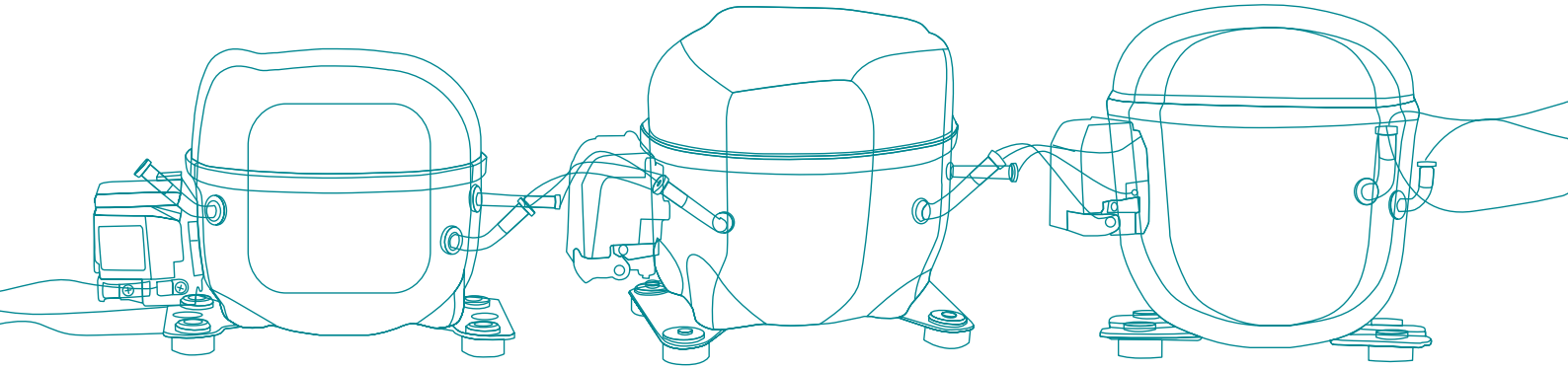

embraco POWER IN. CHANGE ON.

www.embraco.com

GLOBAL PRESENCE

CONTACT US:
marketing.europe@embraco.com

SALES OFFICE:
Via Pietro Andriano, 12
10020 – Riva presso Chieri (TO) - Italy

embraco POWER **IN.** CHANGE **ON.**

Subject to alteration without previous notice - Code AME001EN - Date: January 2015 - Version 04