SC12CNX.2
LBP Compressor
R290
220-240V 50Hz

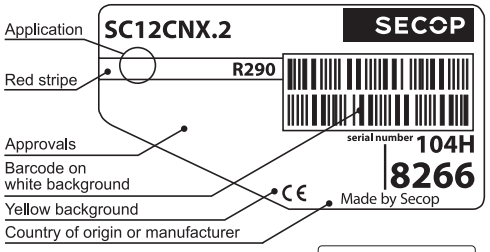

Yellow warning label

General

Code number	104H8266
Approvals	EN 60335-2-34, CCC
Compressors on pallet	80

Application

Application		LBP	
Frequency	Hz	50	60
Evaporating temperature	°C	-40 to -10	–
Voltage range	V	198 - 254	–
Max. condensing temperature continuous (short)	°C	55 (65)	–
Max. winding temperature continuous (short)	°C	125 (135)	–

Cooling requirements

Frequency	Hz	50			60		
Application		LBP	MBP	HBP	LBP	MBP	HBP
32°C		F_2	–	–	–	–	–
38°C		F_2	–	–	–	–	–
43°C		F_2	–	–	–	–	–
Remarks on application:							

S = Static cooling normally sufficient
O = Oil cooling
F_1 = Fan cooling 1.5 m/s (compressor compartment temperature equal to ambient temperature)
F_2 = Fan cooling 3.0 m/s necessary
SG = Suction gas cooling normally sufficent
– = not applicable in this area

Motor

Motor type		CSIR	
LRA (rated after 4 sec. UL984), HST | LST	A	13.1	–
Cut in Current, HST | LST	A	13.1	–
Resistance, main | start winding (25°C)	Ω	6.8	11.5

Design

Displacement	cm^3	12.87
Oil quantity (type)	cm^3	550 (polyolester)
Maximum refrigerant charge	g	150
Free gas volume in compressor	cm^3	1410
Weight without electrical equipment	kg	13.1

Dimensions

Height	mm	A	209
		B	203
		B1	183
		B2	100
Suction connector	location/I.D. mm | angle	C	8.2 | 37°
	material | comment		Copper | Rubber plug
Process connector	location/I.D. mm | angle	D	6.2 | 37°
	material | comment		Copper | Rubber plug
Discharge connector	location/I.D. mm | angle	E	6.2 | 37°
	material | comment		Copper | Rubber plug
Oil cooler connector	location/I.D. mm | angle	F	–
	material | comment		–
Connector tolerance	I.D. mm		±0.09
Remarks:			

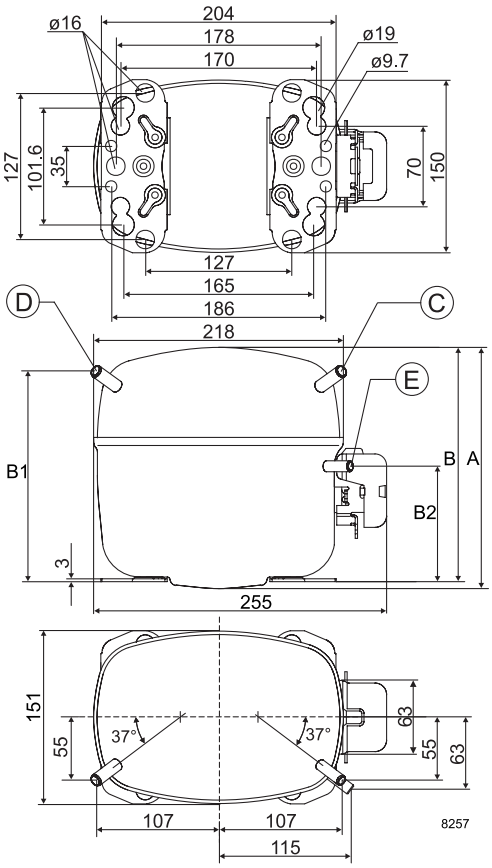

EN 12900 Household (CECOMAF)* t_c = 45°C, 220V, 50Hz, fan cooling F_2

Evap. temp. in °C	-45	-40	-35	-30	-25	-23.3	-20	-15	-10	-6.7	-5	0	5	7.2	10	15	20
Capacity in W		186	258	346	453	493	578	725	895								
Power cons. in W		257	298	339	379	393	419	460	502								
Current cons. in A		1.99	2.09	2.21	2.35	2.40	2.50	2.67	2.86								
COP in W/W		0.72	0.87	1.02	1.19	1.26	1.38	1.58	1.78								

ASHRAE LBP* t_c = 43.3°C, 220V, 50Hz, fan cooling F_2

Evap. temp. in °C	-45	-40	-35	-30	-25	-23.3	-20	-15	-10	-6.7	-5	0	5	7.2	10	15	20
Capacity in W		215	295	393	512	558	654	819	1010								
Power cons. in W		258	297	336	374	388	414	454	496								
Current cons. in A		1.99	2.08	2.20	2.33	2.38	2.48	2.65	2.83								
COP in W/W		0.83	0.99	1.17	1.37	1.44	1.58	1.80	2.04								

EN 12900 Household (CECOMAF) t_c = 55°C, 220V, 50Hz, fan cooling F_2

Evap. temp. in °C	-45	-40	-35	-30	-25	-23.3	-20	-15	-10	-6.7	-5	0	5	7.2	10	15	20
Capacity in W			184	264	359	395	470	598	744								
Power cons. in W			291	343	394	411	443	490	538								
Current cons. in A			2.07	2.21	2.37	2.43	2.55	2.75	2.96								
COP in W/W			0.63	0.77	0.91	0.96	1.06	1.22	1.38								

ASHRAE LBP t_c = 54.4°C, 220V, 50Hz, fan cooling F_2

Evap. temp. in °C	-45	-40	-35	-30	-25	-23.3	-20	-15	-10	-6.7	-5	0	5	7.2	10	15	20
Capacity in W			230	330	447	491	583	741	923								
Power cons. in W			292	344	394	410	442	489	536								
Current cons. in A			2.07	2.21	2.37	2.43	2.55	2.75	2.96								
COP in W/W			0.79	0.96	1.13	1.20	1.32	1.52	1.72								

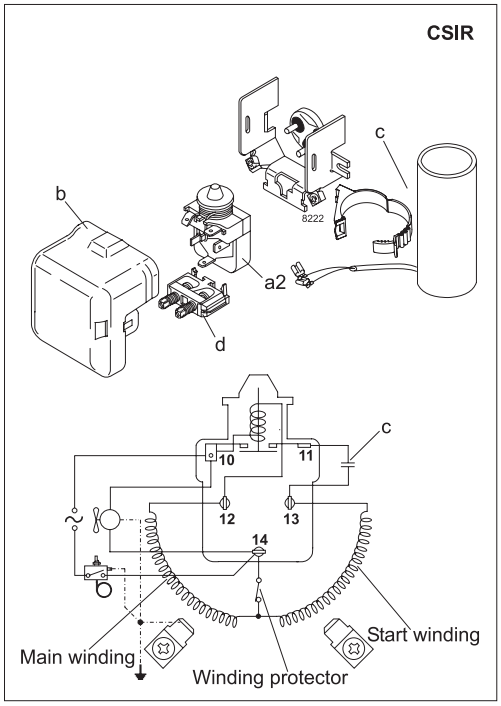

Accessories for	SC12CNX.2	Figure	Code number
PTC starting device	6.3 mm spade connectors	–	–
	4.8 mm spade connectors		–
Starting relay	6.3 mm spade connectors	a2	117U7003
Cover		b	103N2009
Start. capacitor 80 µF	6.3 mm spade connectors	c	117U5017
Cord relief		d	103N1004
Protection screen for PTC		–	–

Test conditions	EN 12900/ CECOMAF(*)	ASHRAE LBP(*)
Condensing temperature	55°C (*45°C)	54.4 (*43.3°C)
Ambient temperature	32°C	32°C
Suction gas temperature	32°C	32°C
Liquid temperature	no subcooling	32°C

Mounting accessories		Code number
Bolt joint for one comp.	Ø: 16 mm	118-1917
Bolt joint in quantities	Ø: 16 mm	118-1918
Snap-on in quantities	Ø: 16 mm	118-1919